Chaffoteaux

VUE ECLATEE
CHAUFFAGE DOMESTIQUE
Modèle
CELTIC HP & HPS

R8202214-05FR - Edition 05 - 24/11/2009

Code	Ind.	Modèle	Date Début	Date Fin
211 231	31	CELTIC 1.14 HP CF NAT	09/94	12/95
211 221	31	CELTIC 1.14 HP CF B/P	...	12/95
241 231	31	TIG 14 HP CF NAT	09/94	12/95
241 221	31	TIG 14 HP CF B/P	...	12/95
241 236	31	TIG 14 HP VMC NAT	09/94	12/95
241 226	31	TIG 14 HP VMC B/P	...	12/95
215 131	31	CELTIC 1.23 HP CF NAT	09/94	12/95
215 121	31	CELTIC 1.23 HP CF B/P	09/94	12/95
245 131	31	TIG 23 HP CF NAT	05/94	12/95
245 121	31	TIG 23 HP CF B/P	...	12/95
245 136	31	TIG 23 HP VMC NAT	09/94	12/95
245 126	31	TIG 23 HP VMC B/P	...	12/95
225 131	31	CELTIC 2.23 HPS NAT	12/87	04/91
225 131	32	CELTIC 2.23 HPS NAT	05/91	07/91
225 131	33	CELTIC 2.23 HPS NAT	08/91	10/92
225 131	34	CELTIC 2.23 HPS NAT	11/92	01/94
225 131	35	CELTIC 2.23 HP CF NAT	02/94	12/95
225 121	31	CELTIC 2.23 HPS B/P	12/87	05/90
225 136	31	CELTIC 2.23 HPS VMC NAT	12/87	04/91
225 136	32	CELTIC 2.23 HPS VMC NAT	05/91	07/91
225 136	33	CELTIC 2.23 HPS VMC NAT	08/91	10/92
225 136	34	CELTIC 2.23 HPS VMC NAT	11/92	12/95
225 137	31	CELTIC 2.23 FF HPS NAT	12/87	12/88
225 137	32	CELTIC 2.23 FF HPS NAT	04/89	05/90
225 137	33	CELTIC 2.23 FF HPS NAT	06/90	04/91
225 137	34	CELTIC 2.23 FF HPS NAT	05/91	07/91
225 137	35	CELTIC 2.23 FF HPS NAT	08/91	10/92
225 137	36	CELTIC 2.23 FF HPS NAT	11/92	12/95
225 127	31	CELTIC 2.23 FF HPS B/P	12/87	12/88
225 127	32	CELTIC 2.23 FF HPS B/P	04/89	05/90
225 132	31	CELTIC 2.23 FF SV HPS NAT	05/93	12/95
225 122	31	CELTIC 2.23 FF SV HPS B/P	...	12/95
225 134	31	CELTIC 2.23 HP FF C NAT	05/94	12/95
225 931	31	CELTIC 2.28 HPS CF NAT	01/88	12/88
225 921	31	CELTIC 2.28 HPS CF B/P	01/88	12/88

100

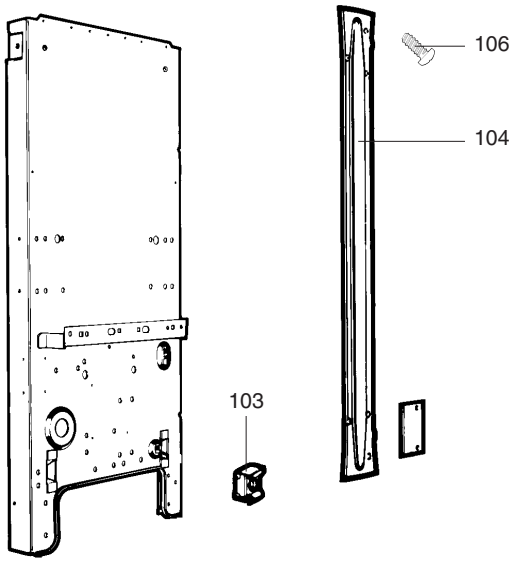

200

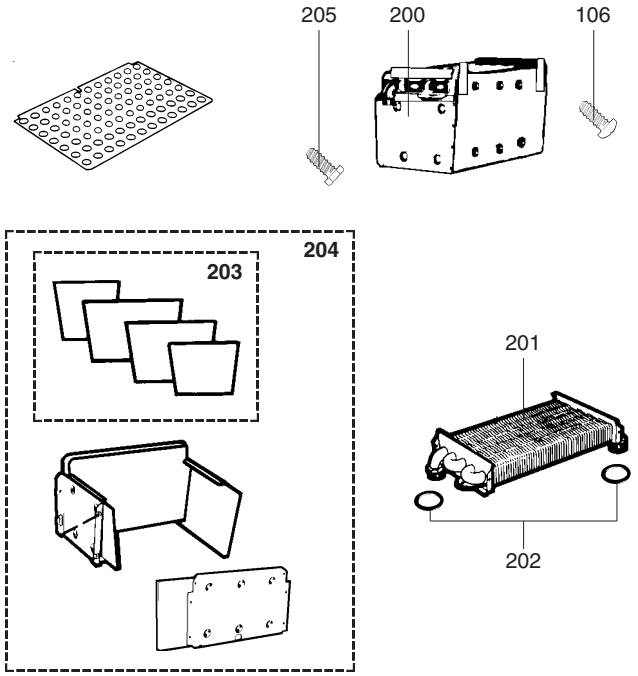

300

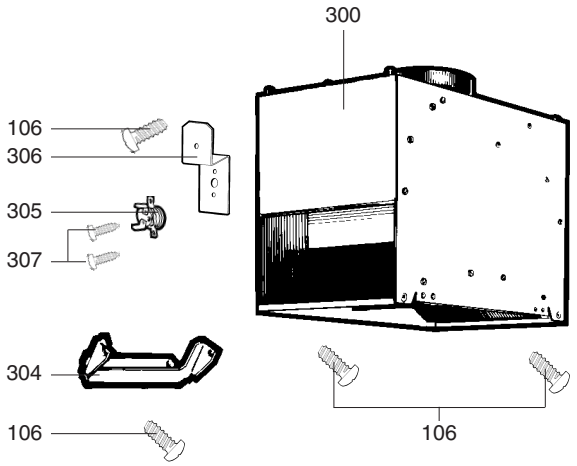

400

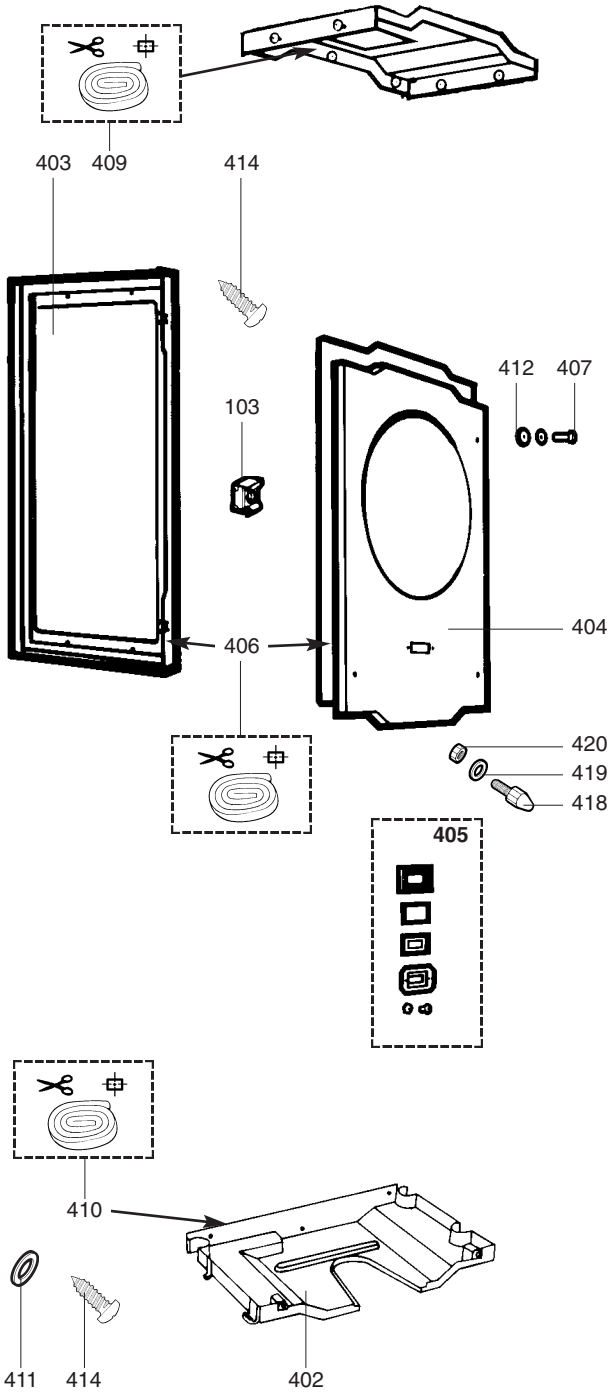

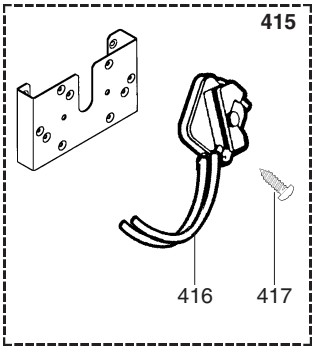

Rep.	Désignation	Référence	Type	14			23							28	Date	
				CELTIC 1.14 HP	TIG 14 HP		CELTIC 1.23 HP		TIG 23 HP	CELTIC 2.23 HP & HPS			CELTIC 2.23 HP	CELTIC 2.28 HPS	de	à
				CF	CF	VMC	CF	CF	VMC	CF	VMC	FF	FFc	CF		
0100	**CHASSIS**															
0103	ECROU EN CAGE M 6	60004806-03		●	●	●	●	●	●	●	●	●	●	●		
0104	GOUTTIERE	60045939				●			●		●					
0106	VIS A TOLE CBLSX D: 4.2-9.5	61010125		●	●	●	●	●	●	●	●	●	●	●		
0200	**CORPS DE CHAUFFE (ENSEMBLE)**	60042522		●	●	●	●	●	●	●	●	●	●			
	CORPS DE CHAUFFE	60042523												●		
0201	ECHANGEUR CORPS DE CHAUFFE	60078242-06		●	●	●	●	●	●	●	●	●	●			
	ECHANGEUR CORPS DE CHAUFFE	60078243-06												●		
0202	JOINT TORIQUE D: 16.1-1.6	60024184-35		●	●	●	●	●	●	●	●	●	●	●		
0203	GARNITURES CERAPLAQUE (Poch.)	60081001		●	●	●	●	●	●	●	●	●	●			
	GARNITURES CERAPLAQUE (Poch.)	60081137												●		
0204	CHAMBRE DE COMBUSTION (Poch.)	60081002		●	●	●	●	●	●	●	●	●	●			
	CHAMBRE DE COMBUSTION (Poch.)	60081130												●		
0205	VIS A TOLE CBLSX D: 6.3-13	61010648		●	●	●	●	●	●	●	●	●	●	●		
0300	**ANTIREFOULEUR**	60078170					●	●		●						
	ANTIREFOULEUR	60078171				●			●		●					
0304	SUPPORT DE BULBE	60045990				●			●		●					
0305	SECURITE THERMIQUE 63°C	61008820		●	●		●	●		●					02/94	12/95
0306	SUPPORT CAPTEUR	61008824		●	●		●	●		●					02/94	12/95
0307	VIS A TOLE CBLZ D: 3.5-6.5	60031521-03		●	●		●	●		●						
0400	**CAISSON ETANCHE**															
0402	FOND DE CAISSON	60077841										●				
0403	PANNEAU COTE	60072448										●	●			
0405	HUBLOT (Pochette)	60081047										●	●			
0406	JOINT MOUSSE SIL 7x7 L: 2.5M	60081273-03										●	●			
0407	VIS HS M 6-15	60019316-03										●	●			
0409	JOINT MOUSSE 12.5x5 L: 2.5M	60081273										●	●			
0410	JOINT MOUSSE SIL 10x3 L: 1M	60081273-05										●	●			
0411	RONDELLE D: 12-6.2-1.2	60007059-03										●	●			
0412	RONDELLE D: 11.5-6.2-1	60034377										●	●			
0414	VIS A TOLE CBLZ D: 4.8-16	60061015										●	●			
0415	PRESSOSTAT AIR (Pochette)	60081691											●			
0416	TUBE SILICONE D: 6x1 L: 1.30M	60081265-04											●			
0417	VIS A TOLE CLS D: 3.9-19	60061982											●			
0419	RONDELLE D: 10-5-1	60022118-03											●			
0420	ECROU H M 5-0.80	60008664-13											●			

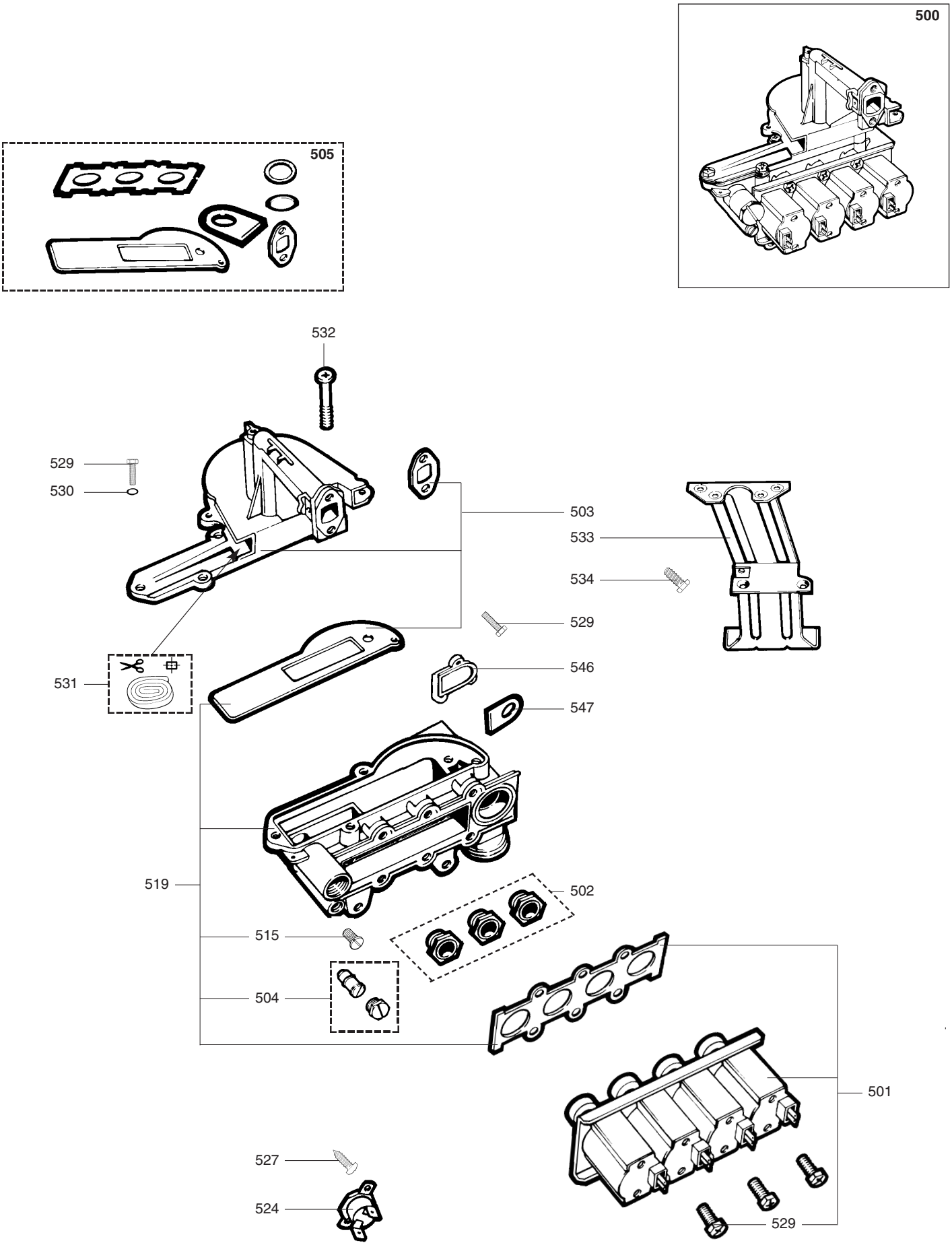
500
505
532
529
530
503
533
534
529
531
546
547
519
502
515
504
501
527
524
529

Rep.	Désignation	Référence	Type	14						23					28	Date	
				CELTIC 1.14 HP	TIG 14 HP		CELTIC 1.23 HP	TIG 23 HP		CELTIC 2.23 HP & HPS			CELTIC 2.23 HP	CELTIC 2.28 HPS			
				CF	CF	VMC	CF	CF	VMC	CF	VMC	FF	FFc	CF		de	à
0500	**ARMATURE GAZ BUT/PROP**	60068639	B/P									●					
	ARMATURE GAZ NAT	60068625	NAT								●						
	ARMATURE GAZ NAT	61007942	NAT							●						02/94	12/95
	ARMATURE GAZ NAT	61008874	NAT				●	●									
0501	ELECTROVANNES (Pochette)	60081003								●	●	●	●	●			
	ELECTROVANNES (Pochette)	60081694		●	●	●	●	●	●								
0502	SIEGES DE CLAPETS (Pochette)	60081006	B/P							●							
	SIEGES DE CLAPETS (Pochette)	60081042	B/P									●					
	SIEGES DE CLAPETS (Pochette)	60081132	B/P											●			
	SIEGES DE CLAPETS (Pochette)	60081004	NAT							●						12/87	01/94
	SIEGES DE CLAPETS (Pochette)	60081005	NAT								●						
	SIEGES DE CLAPETS (Pochette)	60081041	NAT									●					
	SIEGES DE CLAPETS (Pochette)	60081131	NAT											●			
	SIEGES DE CLAPETS (Pochette)	60081642	NAT										●				
	SIEGES DE CLAPETS (Pochette)	60081642	NAT							●						02/94	12/95
	SIEGES DE CLAPETS (Pochette)	60081668	NAT				●	●									
	SIEGES DE CLAPETS (Pochette)	60081707	NAT			●											
0503	EMBASE BRULEUR (POCHETTE)	60081008		●	●	●	●	●	●	●	●			●			
	EMBASE BRULEUR (POCHETTE)	60081043										●	●				
0504	VIS PUISSANCE AJUSTA.(Poch.)	60081009		●	●	●	●	●	●	●	●	●	●	●			
0505	JOINTS ARMATURE GAZ (POCHETTE)	60081010		●	●	●	●	●	●	●	●	●	●	●			
0515	VIS DE PRISE DE PRESSION	60019445		●	●	●	●	●	●	●	●	●	●	●			
0519	PARTIE GAZ EQUIPEE (Pochette)	60081023								●	●	●	●	●			
	PARTIE GAZ EQUIPEE (Pochette)	60081693		●	●	●	●	●	●								
0524	SECURITE THERMIQUE 110°C	60054630										●	●				
	SECURITE THERMIQUE 110°C REAR.	60070773		●	●	●	●	●	●	●	●			●			
0527	VIS A TOLE CBLZ D: 3.5-6.5	60031521-03		●	●	●	●	●	●	●	●	●	●	●			
0529	VIS HX M 5-12	61010131		●	●	●	●	●	●	●	●	●	●	●			
0530	RONDELLE D: 12-6.2-1.2	60007059-03										●	●				
0531	JOINT MOUSSE SIL 7x7 L: 2.5M	60081273-03										●	●				
0532	VIS M 5-35	60075760-03		●	●	●	●	●	●	●	●	●	●	●			
0533	SUPPORT BOITIER ELECTRIQUE	60074925		●	●	●	●	●	●	●	●			●			
0534	VIS A TOLE CBLSX D: 6.3-13	61010648		●	●	●	●	●	●	●	●			●			
0546	COUVERCLE PARTIE GAZ	60079232		●	●	●	●	●	●	●	●	●	●	●			
0547	JOINT DE FORME (/Couvercle)	60060021		●	●	●	●	●	●	●	●	●	●	●			

600

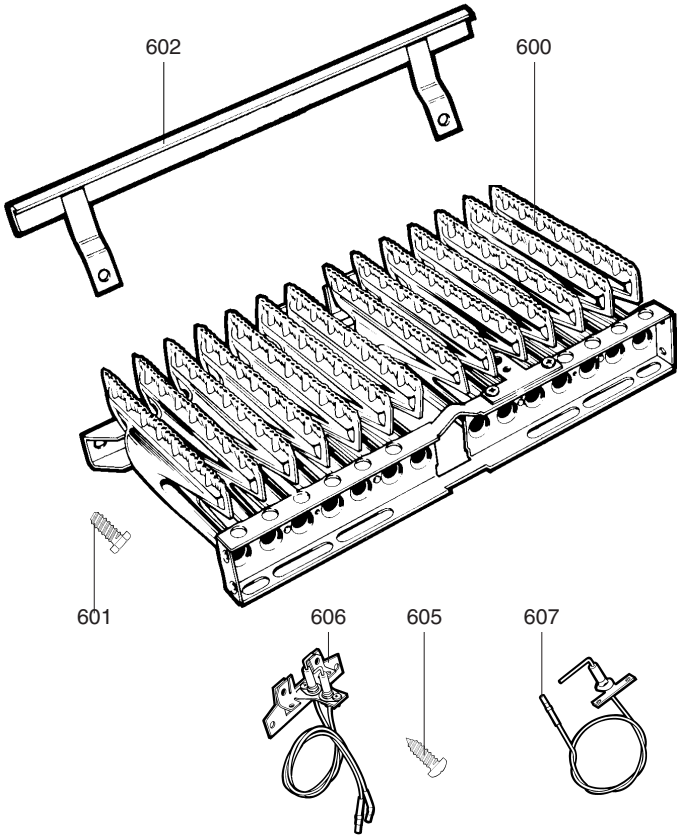

1100

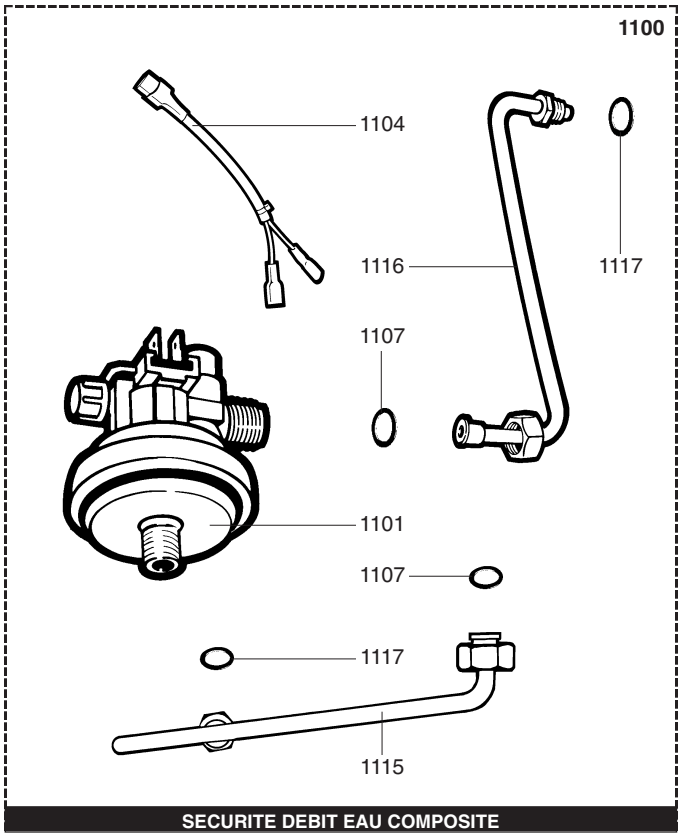

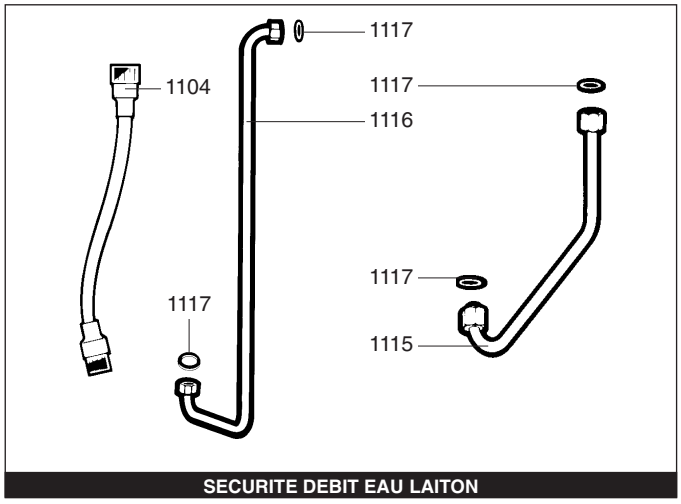

700

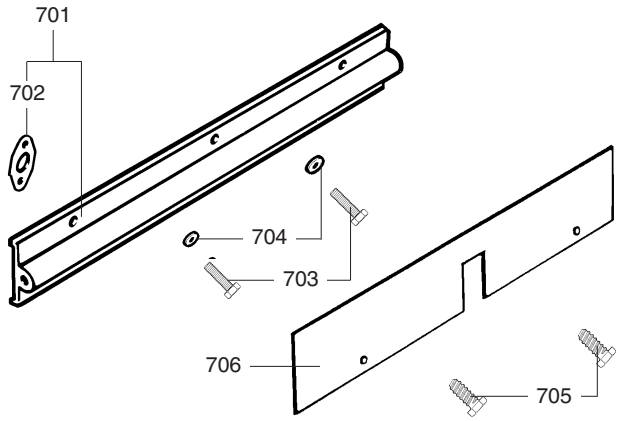

1000

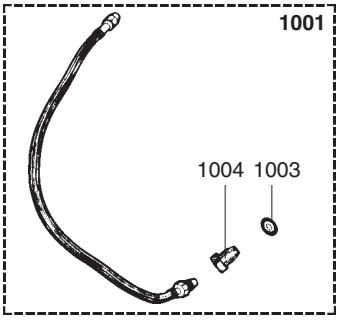

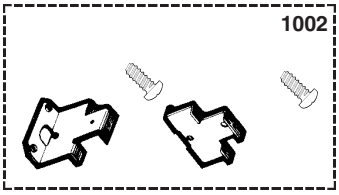

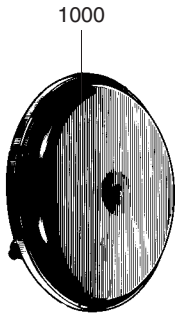

1200

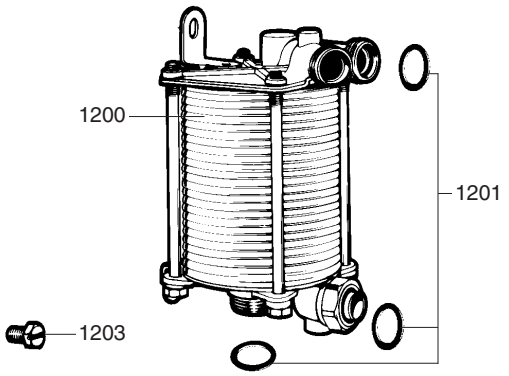

Rep.	Désignation	Référence	Type	14						23					28	Date	
				CELTIC 1.14 HP	TIG 14 HP		CELTIC 1.23 HP	TIG 23 HP		CELTIC 2.23 HP & HPS			CELTIC 2.23 HP	CELTIC 2.28 HPS			
				CF	CF	VMC	CF	CF	VMC	CF	VMC	FF	FFc	CF		de	à
0600	**BLOC DE BECS**	60079368		●	●	●	●	●	●	●	●	●	●				
0601	VIS A TOLE CBLSX D: 6.3-13	61010648		●	●	●	●	●	●	●	●		●	●			
0602	GOUTTIERE D'ONDE	60079410		●	●	●	●	●	●	●	●	●	●	●			
0605	VIS A TOLE CBLZ D: 3.5-6.5	60031521-03		●	●	●	●	●	●	●	●	●	●	●			
0606	ELECTRODE ALLUMAGE ENS	60077790								●	●	●		●		12/87	01/91
	ELECTRODE ALLUMAGE ENS	61004019		●	●	●	●	●	●				●				
	ELECTRODE ALLUMAGE ENS	61004019								●	●	●				02/91	12/95
0607	ELECTRODE IONISATION	60078258		●	●	●	●	●	●	●	●	●	●	●			
0700	**NOURRICE**																
0701	NOURRICE BUT/PROP (Pochette)	60081012	B/P	●	●	●	●	●	●	●							
	NOURRICE BUT/PROP (POCHETTE)	60081084	B/P									●					
	NOURRICE BUT/PROP (POCHETTE)	60081136	B/P											●			
	NOURRICE NAT (Pochette)	60081011	NAT	●	●	●	●	●	●	●	●	●	●				
	NOURRICE NAT (POCHETTE)	60081143	NAT											●			
0702	JOINT DE FORME (/NOURRICE)	60071226		●	●	●	●	●	●	●	●	●	●	●			
0703	VIS HX M 5-12	61010131		●	●	●	●	●	●	●	●	●	●	●			
0704	RONDELLE D: 12-5.2-1	60061934-03		●	●	●	●	●	●	●	●	●	●	●			
0705	VIS A TOLE CBLSX D: 4.2-25	61010128		●	●	●	●	●	●	●	●	●	●	●			
0706	DEFLECTEUR	60060727											●				
1000	**VASE D'EXPANSION**	60056676-06		●	●	●	●	●	●	●	●	●	●	●			
1001	DURIT (Pochette)	60081013		●	●	●	●	●	●	●	●	●	●	●			
1002	SUPPORT DE VESPI (Pochette)	60081014		●	●	●	●	●	●	●	●			●			
	SUPPORT DE VESPI (Pochette)	60081045										●	●				
1003	BAGUE BICONE D: 6	60022865		●	●	●	●	●	●	●	●	●	●	●			
1004	VIS RACCORD BICONE	60031269		●	●	●	●	●	●	●	●	●	●	●			
1100	**KIT SECURITE DEBIT EAU HPS FF**	61004103										●				12/87	05/90
1101	SECURITE DEBIT EAU	61000658										●	●			06/90	12/95
1104	CABLAGE SECURITE DEBIT EAU	61000731										●	●			06/90	12/95
1107	JOINT PLAT D: 11-5-1.5	60061853-07										●	●				
1115	TUBE DE SURPRESSION	61001473										●				06/90	12/95
1116	TUBE DE DEPRESSION	60079053										●				12/87	05/90
	TUBE DE DEPRESSION	61001474										●	●			06/90	12/95
1117	JOINT TORIQUE D: 6-1	60024164-41										●	●				
1200	**ECHANGEUR SANITAIRE 24 C KIT**	61001974								●	●	●	●	●			
1201	JOINT TORIQUE D: 16-1.9	60024183-37								●	●	●	●	●			
1203	VIS HS M 8-16	60031519-03								●	●	●	●	●			
1208	RACCORD M 3/4 F 1/2	60048257								●	●	●	●	●			

1300

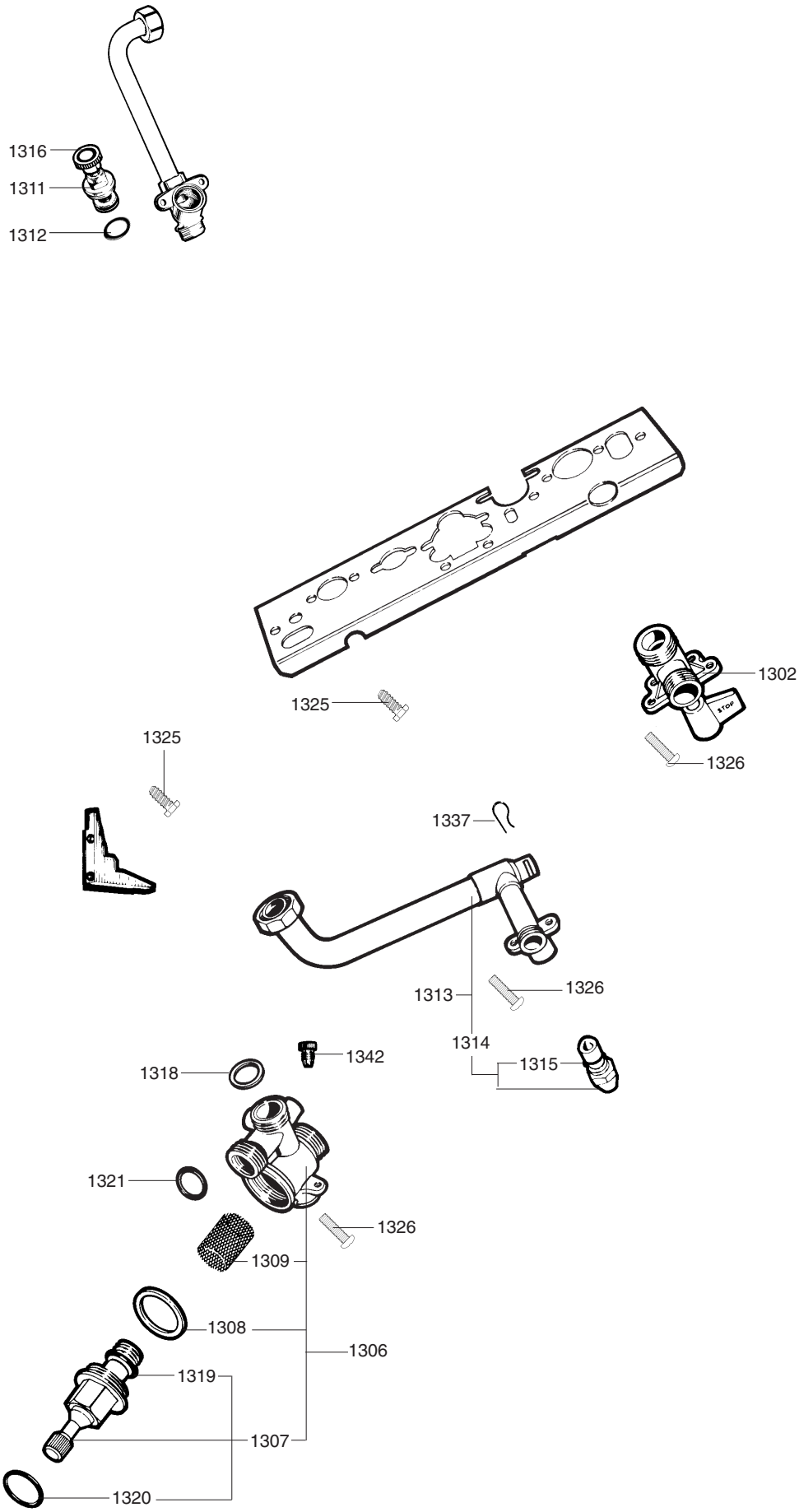

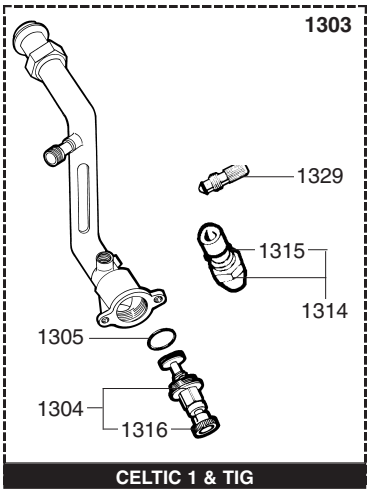

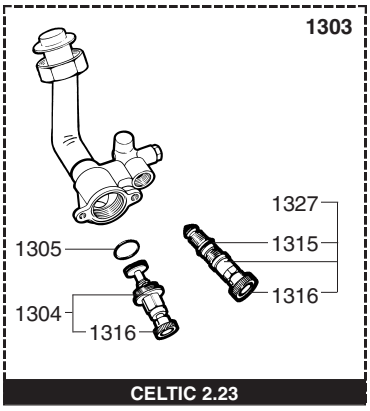

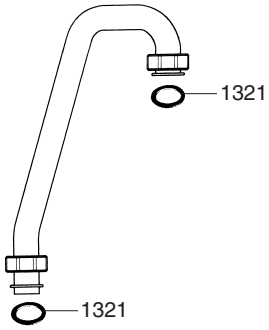

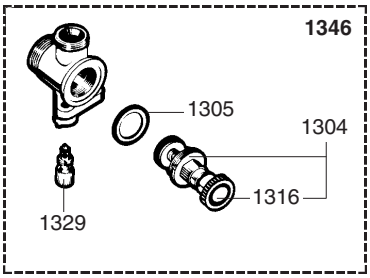

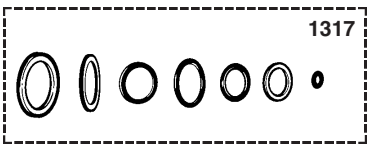

R8205273

Rep.	Désignation	Référence	Type	14						23					28	Date	
				CELTIC 1.14 HP	TIG 14 HP		CELTIC 1.23 HP	TIG 23 HP		CELTIC 2.23 HP & HPS			CELTIC 2.23 HP	CELTIC 2.28 HPS			
				CF	CF	VMC	CF	CF	VMC	CF	VMC	FF	FFc	CF		de	à
1300	**BARRETTE DE ROBINETTERIE**																
1302	ROBINET GAZ	60044500		●	●	●	●	●	●	●	●	●	●	●			
1303	ROBINET DEPART CHAUFFAGE	60078587								●	●	●	●	●			
1304	TETE DE ROBINET ENS	60067704		●	●	●	●	●	●	●	●	●	●	●			
1305	JOINT PLAT D: 29.6-25.5-1.5	60061856-04		●	●	●	●	●	●	●	●	●	●	●			
1306	ROBINET RETOUR CHAUFFAGE 3/4”	60044550								●	●	●	●	●			
1307	TETE DE ROBINET ENS	60031040		●	●	●	●	●	●	●	●	●	●	●			
1308	JOINT PLAT D: 38-32.2-1.5	60061857-23		●	●	●	●	●	●	●	●	●	●	●			
1309	FILTRE	60025261		●	●	●	●	●	●	●	●	●	●	●			
1311	TETE DE ROBINET ENS	60069115								●	●	●	●	●			
1312	JOINT PLAT D: 24.3-21-1.5	60061856-13								●	●	●	●	●			
1313	TUBE EAU CHAUDE	60078438								●	●	●	●	●			
1314	VIS DE DEBIT EAU	60078500		●	●	●	●	●	●	●	●	●	●	●			
1315	JOINT TORIQUE D: 8.9-1.9	60024164-13		●	●	●	●	●	●	●	●	●	●	●			
1316	BOUTON DE MANOEUVRE	60066107		●	●	●	●	●	●	●	●	●	●	●			
1317	JOINTS PLAQUE ROBINET. (Poch.)	60081061		●	●	●	●	●	●	●	●	●	●	●			
1318	JOINT PLAT D: 24-16.2-1.5	60061855-02		●	●	●	●	●	●	●	●	●	●	●			
1319	JOINT TORIQUE D: 16.9-2.7	60024164-21		●	●	●	●	●	●	●	●	●	●	●			
1320	JOINT TORIQUE D: 15.1-2.7	60024164-20		●	●	●	●	●	●	●	●	●	●	●			
1321	JOINT TORIQUE D: 16-1.9	60024183-37		●	●	●	●	●	●	●	●	●	●	●			
1325	VIS A TOLE CBLSX D: 6.3-13	61010648		●	●	●	●	●	●	●	●	●	●	●			
1326	VIS M 6-10	60031527-03		●	●	●	●	●	●	●	●	●	●	●			
1327	TIGE DE MANOEUVRE	60078548								●	●	●	●	●			
1329	PURGEUR EQUIPE (Pochette)	60081028		●	●	●	●	●	●								
1337	CLIP	60031546								●	●	●	●	●			
1342	BOUCHON M 10-100	60036342-08			●	●		●	●								
1346	ROBINET	60031721			●	●		●	●								

1400

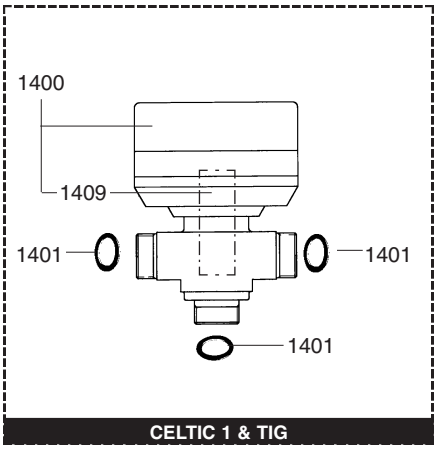

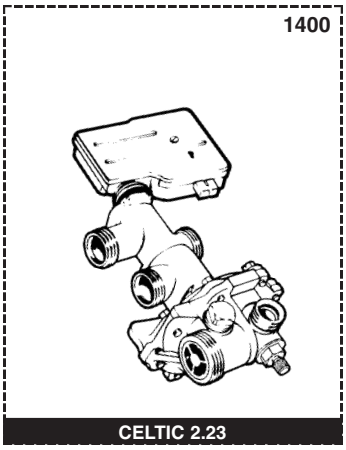

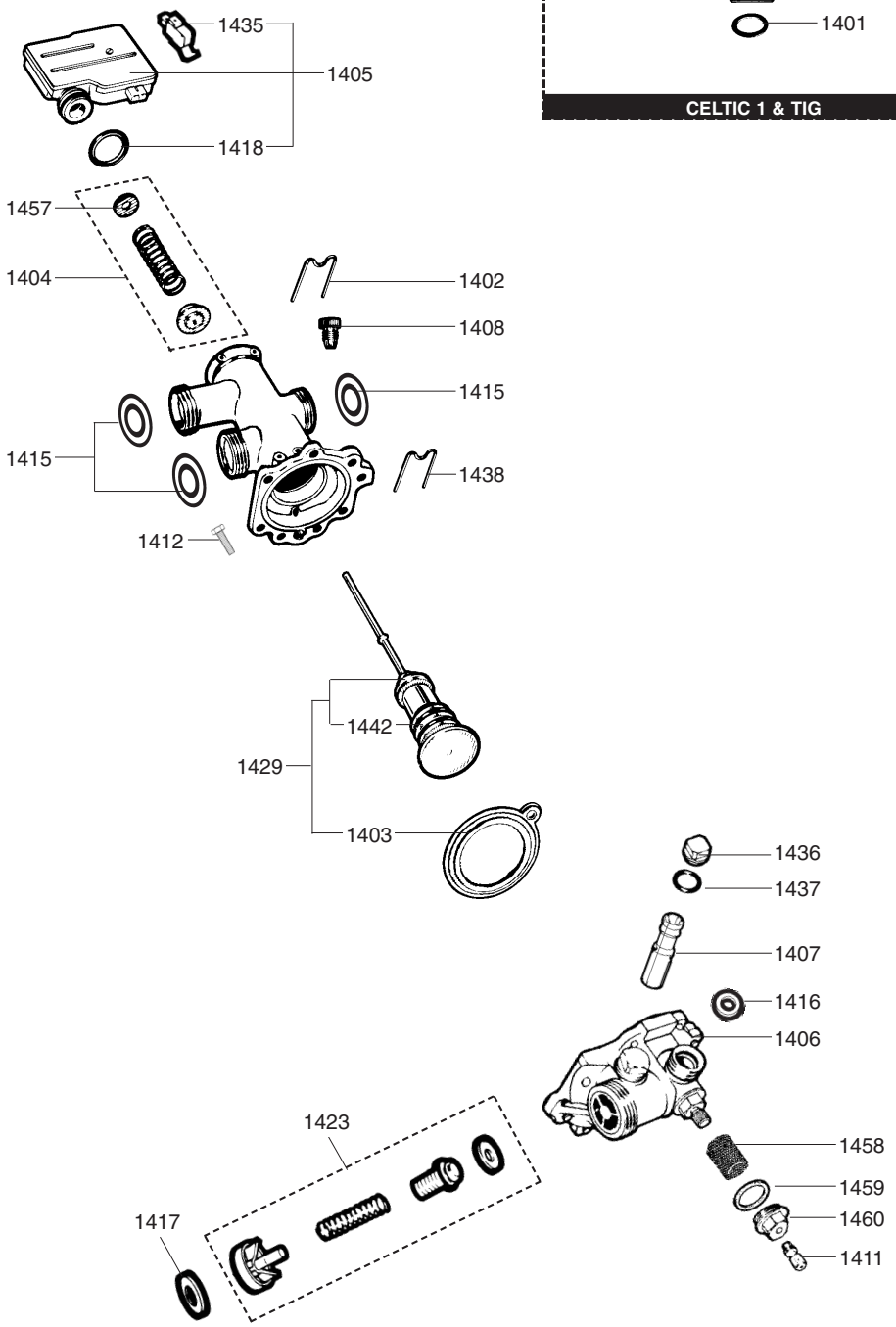

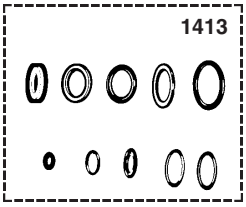

R8205274

Rep.	Désignation	Référence	Type	14						23					28	Date	
				CELTIC 1.14 HP	TIG 14 HP		CELTIC 1.23 HP		TIG 23 HP	CELTIC 2.23 HP & HPS			CELTIC 2.23 HP	CELTIC 2.28 HPS			
				CF	CF	VMC	CF	CF	VMC	CF	VMC	FF	FFc	CF		de	à
1400	**VALVE DISTRIBUTRICE ENS**	60078088								●	●	●	●	●			
	VANNE 3 VOIES	61008271			●	●		●	●								
1401	JOINT PLAT D: 24-16.2-1.5	60061855-02			●	●		●	●								
1402	CLIP	60031764								●	●	●	●	●			
1403	MEMBRANE (Pochette)	60081016								●	●	●	●	●			
1404	CLAPET CIRCUIT COURT (Poch.)	60081017								●	●	●	●	●			
1405	BOITIER MICRORUPTEUR	60046713								●	●	●	●	●			
1406	FOND DE VD EQUIPE (Pochette)	60078182								●	●	●	●	●			
1407	VENTURI D: 1.95	60018892-40								●	●	●	●	●			
1408	BOUCHON M 10-100	60036342-08								●	●	●	●	●			
1409	REFECTION VANNE 3 VOIES	60081903			●	●		●	●								
1411	PURGEUR EQUIPE (Pochette)	60081028								●	●	●	●	●			
1412	VIS HX M 5-12	61010131								●	●	●	●	●			
1413	JOINTS VALVE DISTRIBUT (Poch.)	60081279								●	●	●	●	●			
1415	JOINT TORIQUE D: 16-1.9	60024183-37								●	●	●	●	●			
1416	JOINT TORIQUE D: 11.1-1.78	60024183-38								●	●	●	●	●			
1417	JOINT PLAT D: 29.6-22-1.5	60061856-14								●	●	●	●	●			
1418	JOINT TORIQUE D: 19.8-3.6	60024164-24								●	●	●	●	●			
1423	CLAPET ANTI-RETOUR (Pochette)	60081027								●	●	●	●	●			
1429	CLAPET CHAUFFAGE (Pochette)	60081237								●	●	●	●	●			
1435	MICRO CONTACT SIMPLE	60034881								●	●	●		●		12/87	11/89
	MICRO CONTACT SIMPLE	61001157								●	●	●	●	●		12/89	12/95
1436	BOUCHON 3/8	60043784-08								●	●	●	●	●			
1437	JOINT PLAT D: 20.1-17.1-1.5	60061855-09								●	●	●	●	●			
1438	CLIP	60025076-03								●	●	●	●	●			
1442	PRESSE ETOUPE	60031073								●	●	●	●	●			
1457	RONDELLE D: 16-6.2-0.5	60031280-01								●	●	●	●	●			
1458	FILTRE	61008934								●	●	●	●	●			
1459	JOINT TORIQUE D: 22-2	60024959-03								●	●	●	●	●			
1460	BOUCHON	61008933								●	●	●	●	●			

1500

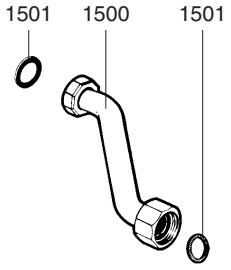

1600

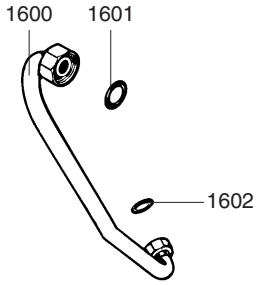

1700

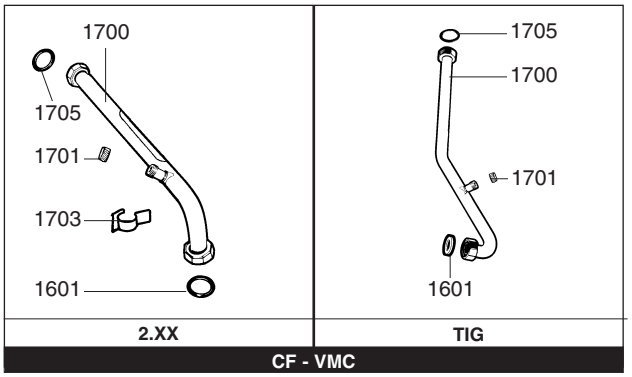

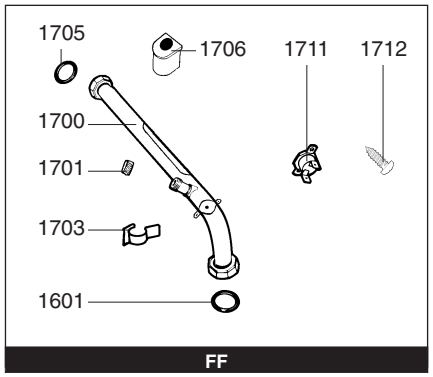

1800

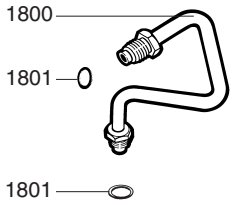

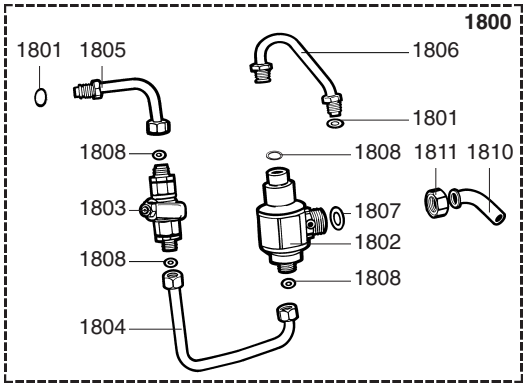

1900

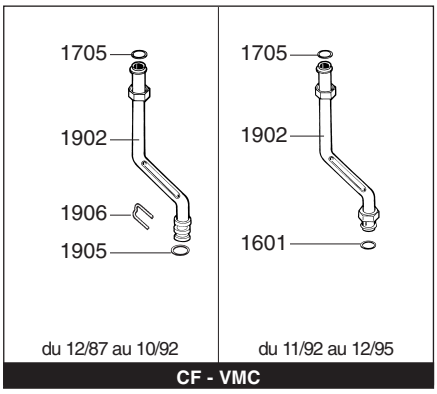

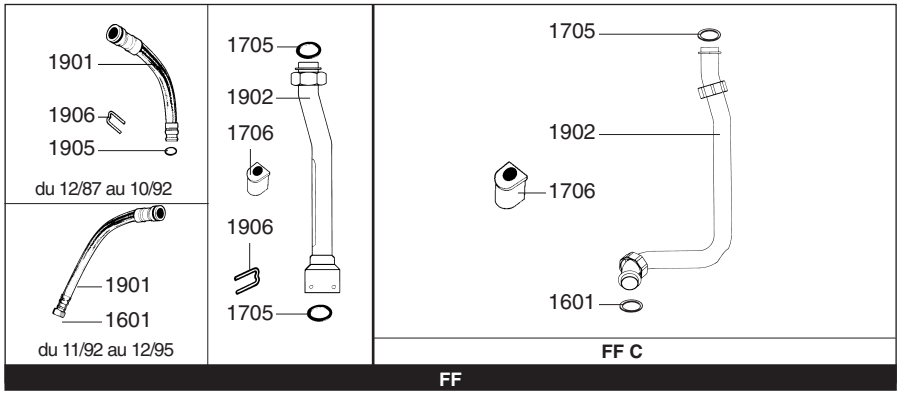

2000

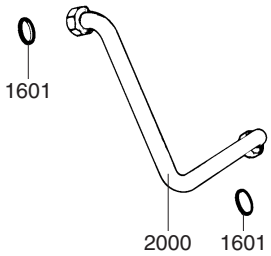

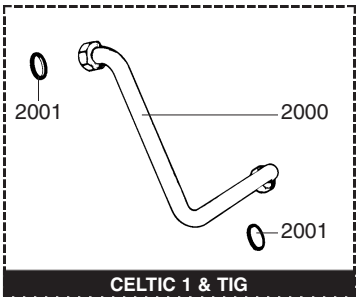

Rep.	Désignation	Référence	Type	14						23					28	Date	
				CELTIC 1.14 HP	TIG 14 HP		CELTIC 1.23 HP	TIG 23 HP		CELTIC 2.23 HP & HPS			CELTIC 2.23 HP	CELTIC 2.28 HPS			
				CF	CF	VMC	CF	CF	VMC	CF	VMC	FF	FFc	CF		de	à
1500	**TUBE GAZ**	60074041		●	●	●	●	●	●	●	●			●			
1501	JOINT PLAT D: 24-18.2-1.5	60022835-01		●	●	●	●	●	●	●	●	●	●	●			
1600	**TUBE EAU FROIDE VD A ECHANGEUR**	60078128								●	●	●	●	●			
1601	JOINT TORIQUE D: 16-1.9	60024183-37								●	●	●	●	●			
1602	JOINT PLAT D: 29.6-22-1.5	60061856-14								●	●	●	●	●			
1700	**TUBE VD A CDC**	60078126-08								●	●						
	TUBE VD A CDC	60079101-08												●			
	TUBE VD A CDC	60079351-08										●	●				
	TUBE CDC A VANNE 3 VOIES	61008264			●	●		●	●								
1701	ECROU M 14-0.75	60064552			●	●		●	●	●	●	●	●	●			
1703	CLIP	60078502								●	●	●	●	●			
1705	JOINT TORIQUE D: 16.1-1.6	60024184-35		●	●	●	●	●	●	●	●	●	●	●			
1706	PASSE TUBE D: 18	60072075										●	●				
1711	SECURITE THERMIQUE 110°C REAR.	60070773										●	●				
1712	VIS A TOLE CBLZ D: 3.5-6.5	60031521-03										●	●				
1800	**TUBE DE REMPLISSAGE**	60078123								●	●	●		●		12/87	07/91
	DISCONNECTEUR ENS	61007104								●	●	●	●			08/91	12/95
1801	JOINT TORIQUE D: 6-1	60024164-41								●	●	●	●	●			
1802	DISCONNECTEUR (Pochette)	60081486								●	●	●	●				
1803	ROBINET DISCONNECTEUR (Poch.)	60081487								●	●	●	●				
1804	TUBE DISCONNECTEUR	61007155								●	●	●	●				
1805	TUBE VD A ROBINET	61007126								●	●	●	●				
1807	JOINT PLAT D: 14.8-10.3-1.5	60061854-11								●	●	●	●				
1808	JOINT PLAT D: 8.5-4.1-1.5	60061852-12								●	●	●	●				
1810	DOUILLE DE RACCORDEMENT	60001574								●	●	●	●				
1811	ECROU 3/8" EP: 11	60020746-20								●	●	●	●				
1900	**TUBE DE REFOULEMENT**																
1901	DURIT	60078963										●				12/87	07/91
	DURIT	61004681										●				08/91	10/92
	DURIT	61004705										●				11/92	12/95
1902	TUBE DE REFOULEMENT-CIRCULATEUR	60079055-08										●				12/87	06/91
	TUBE DE REFOULEMENT-CIRCULATEUR	61001552								●	●					12/87	10/92
	TUBE DE REFOULEMENT-CIRCULATEUR	61001574		●	●	●	●	●	●	●	●					11/92	12/95
	TUBE DE REFOULEMENT-CIRCULATEUR	61004047												●			
	TUBE DE REFOULEMENT-CIRCULATEUR	61004680										●				08/91	12/95
1905	JOINT TORIQUE D: 16-5	60024959-12								●	●	●		●			
1906	CLIP	60031764								●	●	●		●			
2000	**TUBE DE CIRCUIT COURT**	60072476								●	●	●	●	●			
	TUBE BY-PASS	61009264		●	●	●	●	●	●								
2001	JOINT PLAT D: 18.4-12.2-1.5	60061855-14		●	●	●	●	●	●								
2002	CLAPET ANTI-RETOUR	61003169			●	●		●	●								

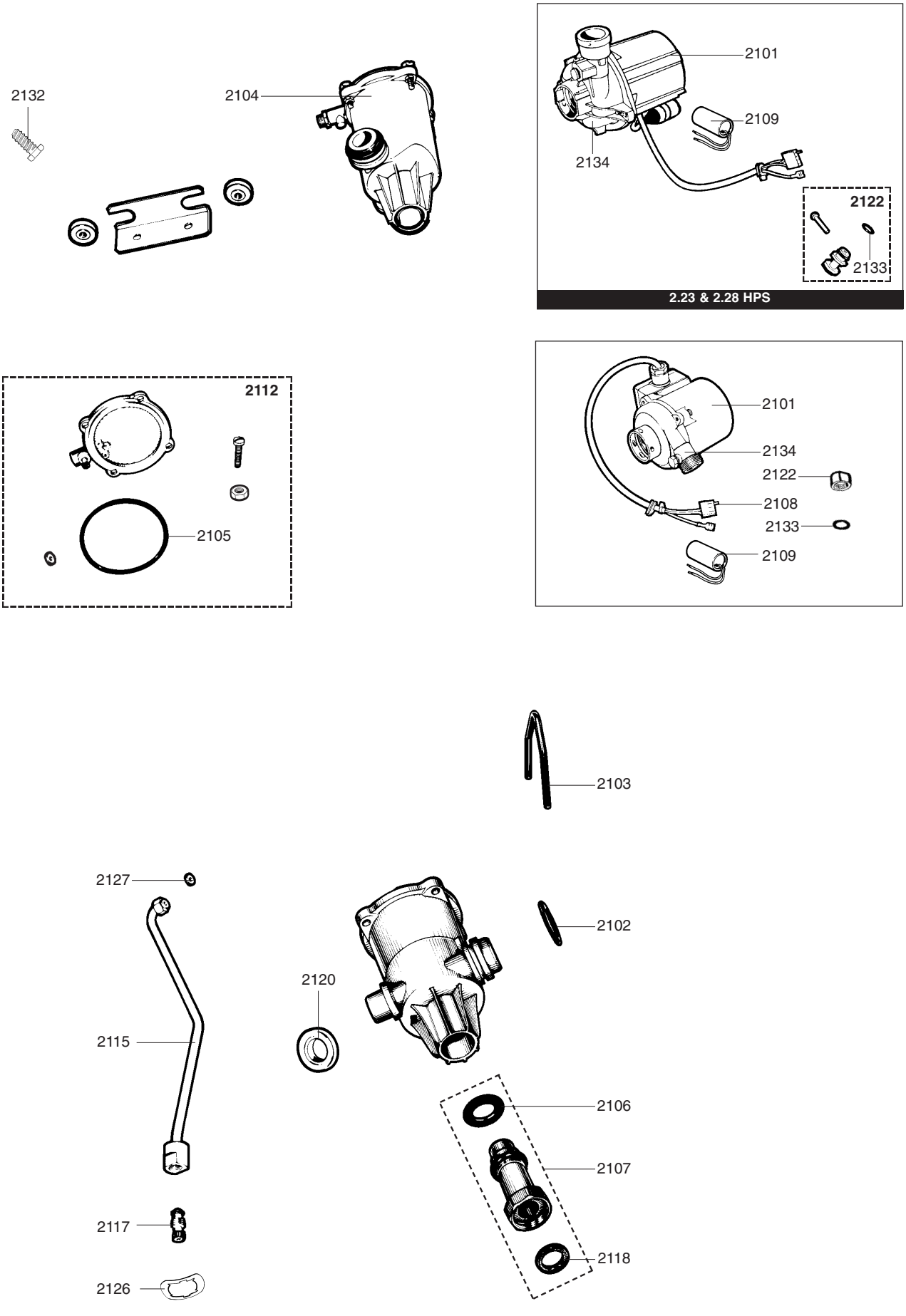
2132
2104
2101
2109
2134
2122
2133
2.23 & 2.28 HPS
2112
2105
2101
2134
2122
2108
2133
2109
2103
2127
2102
2120
2115
2106
2107
2117
2118
2126
2110

Rep.	Désignation	Référence	Type	14						23					28	Date	
				CELTIC 1.14 HP	TIG 14 HP		CELTIC 1.23 HP		TIG 23 HP	CELTIC 2.23 HP & HPS			CELTIC 2.23 HP	CELTIC 2.28 HPS			
				CF	CF	VMC	CF	CF	VMC	CF	VMC	FF	FFc	CF		de	à
2100	**POMPE**																
2101	CIRCULATEUR 1 VITESSE (D)	60073887								●	●	●		●		12/87	04/91
	CIRCULATEUR 1 VITESSE (S)	60073887-20								●	●	●		●		12/87	04/91
	CIRCULATEUR 2 VITESSES (D)	61001959								●	●	●				05/91	10/92
	CIRCULATEUR UP 15/50 230V STD(G)	61010612		●	●	●	●	●	●	●	●	●	●			11/92	12/95
2102	JOINT TORIQUE D: 27.8-3.6	60024164-35		●	●	●	●	●	●	●	●	●	●	●			
2103	CLIP	60030898-03		●	●	●	●	●	●	●	●	●	●	●			
2104	DEGAZEUR (Pochette)	60081019		●	●	●	●	●	●	●	●	●	●	●			
2105	JOINT DE FORME (/Degazeur)	60053847		●	●	●	●	●	●	●	●	●	●	●			
2106	JOINT TORIQUE D: 16-5	60024959-12		●	●	●	●	●	●	●	●	●	●	●			
2107	RACCORD DE DEGAZEUR (Pochette)	60081020		●	●	●	●	●	●	●	●	●	●	●			
2108	CABLAGE DE CIRCULATEUR (2 VITESSES)	61004115		●	●	●	●	●	●	●	●	●	●	●		11/92	12/95
2109	CONDENSATEUR 2 MF	60028463								●	●	●		●		12/87	04/91
	CONDENSATEUR	61000652-10		●	●	●	●	●	●	●	●	●	●			11/92	12/95
	CONDENSATEUR 2 VITESSES	61004625								●	●	●				05/91	10/92
2110	JOINTS DE DEGAZEUR (Pochette)	60081024		●	●	●	●	●	●	●	●	●	●	●			
2112	COUVERCLE DEGAZEUR (Pochette)	60081388		●	●	●	●	●	●	●	●	●	●	●			
2115	TUBE DEGAZEUR	61000587		●	●	●	●	●	●	●	●	●	●	●			
2117	PURGEUR EQUIPE (Pochette)	60081028		●	●	●	●	●	●	●	●	●	●	●			
2118	JOINT PLAT D: 24-16.2-1.5	60061855-02		●	●	●	●	●	●	●	●	●	●	●			
2120	SILENCIEUX	60025136		●	●	●	●	●	●	●	●	●	●	●			
2122	BOUCHON M 10-100	60015709		●	●	●	●	●	●	●	●	●	●			11/92	12/95
	RACCORD SURPRESSION (Pochette)	60081046										●				12/87	10/92
	BOUCHON SURPRESSION (Pochette)	60081332								●	●			●		12/87	10/92
2126	CLIP	60074376		●	●	●	●	●	●	●	●	●	●	●			
2127	JOINT PLAT D: 8.5-4.1-1.5	60061852-12		●	●	●	●	●	●	●	●	●	●	●			
2132	VIS A TOLE CBLSX D: 6.3-13	61010648		●	●	●	●	●	●	●	●	●	●	●			
2133	JOINT TORIQUE D: 5.7-1.9	60024183-10								●	●	●		●		12/87	10/92
	RONDELLE D: 8.8-3.25	60054118		●	●	●	●	●	●	●	●	●	●			11/92	12/95
2134	VOLUTE (CIRCULATEUR D)	60081029								●	●	●		●			
	VOLUTE (CIRCULATEUR S)	60081761								●	●	●		●			

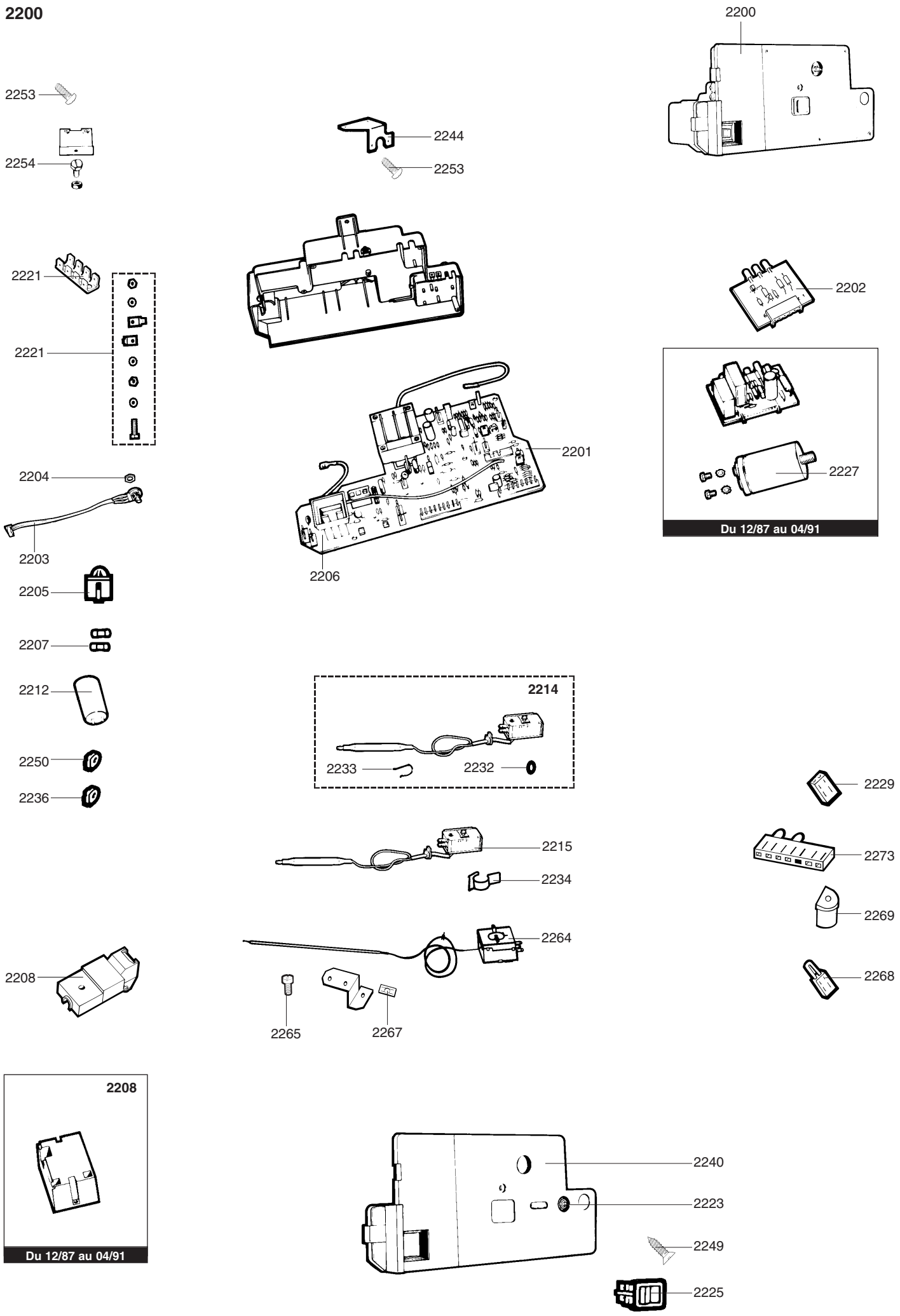
2200
2200
2253
2244
2253
2254
2221
2221
2202
2201
2227
Du 12/87 au 04/91
2204
2203
2206
2205
2207
2212
2214
2233
2232
2250
2236
2229
2215
2273
2234
2269
2264
2208
2268
2265
2267
2208
Du 12/87 au 04/91
2240
2223
2249
2225

R8205277

Rep.	Désignation	Référence	Type	14						23					28	Date	
				CELTIC 1.14 HP	TIG 14 HP		CELTIC 1.23 HP	TIG 23 HP		CELTIC 2.23 HP & HPS			CELTIC 2.23 HP	CELTIC 2.28 HPS			
				CF	CF	VMC	CF	CF	VMC	CF	VMC	FF	FFc	CF		de	à
2200	**BOITIER ELECTRIQUE**	60078518								●						12/87	01/94
	BOITIER ELECTRIQUE	60078519									●						
	BOITIER ELECTRIQUE	61008830								●						02/94	12/95
2201	CIRCUIT IMPRIME (MOT.1V) KIT	60081492								●	●	●		●		12/87	04/91
	CIRCUIT IMPRIME	61004599								●	●	●				05/91	12/95
	CIRCUIT IMPRIME	61009660		●	●	●	●	●	●								
	CIRCUIT IMPRIME	61009801											●				
2202	CIRCUIT IMPRIME VE	61004219		●	●	●	●	●	●	●	●	●	●			05/91	12/95
2203	POTENTIOMETRE	60078577		●	●	●	●	●	●	●	●	●	●	●			
2204	ECROU H 10-0.75	60078576		●	●	●	●	●	●	●	●	●	●	●			
2205	SUPPORT FUSIBLE	60044799-10		●	●	●	●	●	●	●	●	●	●	●			
2206	CAPOT DE PROTECTION	60044800-10		●	●	●	●	●	●	●	●	●	●	●			
2207	FUSIBLE 250V 2A	60054442		●	●	●	●	●	●	●	●	●	●	●			
2208	ALLUMEUR	60071266								●	●	●		●		12/87	04/91
	ALLUMEUR	61002105-20		●	●	●	●	●	●	●	●	●	●			05/91	12/95
2212	CONDENSATEUR 2 MF	60028463								●	●	●		●		12/87	04/91
2214	AQUASTAT 57°C (Pochette)	60100606-30								●	●	●	●	●			
2215	THERMOSTAT CHAUFFAGE 85°C	60056974								●	●	●	●	●			
2221	VIS DE MASSE (Pochette)	60081169								●	●	●		●		12/87	05/93
	BARRETTE CONNEXION	61002725		●	●	●	●	●	●	●	●	●	●	●		06/93	12/95
2223	DISJONCTEUR	60070852		●	●	●	●	●	●	●	●	●	●	●			
2225	INTERRUPTEUR NOIR	60078572-10			●	●		●	●	●	●	●	●	●			
	INTERRUPTEUR	61004828		●			●										
2227	CONDENSATEUR	60070779								●	●	●		●		12/87	04/91
2229	CONNECTEUR 3 BROCHES	60074977								●	●	●		●			
2232	JOINT TORIQUE D: 7.2-1.9	60024164-12								●	●	●	●	●			
2233	CLIP	60031546								●	●	●	●	●			
2234	CLIP	60078502								●	●	●	●	●			
2236	PASSE FIL	60027837		●	●	●	●	●	●	●	●	●	●	●			
2240	COUVERCLE BOITIER ELECTRIQUE	60078052		●	●	●	●	●	●	●	●	●	●	●			
2244	SUPPORT BOITIER ELECTRIQUE	60079087		●	●	●	●	●	●			●	●				
2249	VIS F90Z D: 3.5-16	61004804-20		●	●	●	●	●	●	●	●	●	●	●			
2250	PASSE FIL	60027838		●	●	●	●	●	●	●	●	●	●	●			
2253	VIS A TOLE CBLSX D: 6.3-13	61010648		●	●	●	●	●	●	●	●	●	●	●			
2254	VIS HS M 6-25	60010942-13		●	●	●	●	●	●	●	●	●	●	●			
2264	THERMOSTAT 60°C	60054310				●			●		●						
2265	VIS M 4-6	60019197-03				●			●		●						
2267	CLIP	60078796				●			●		●						
2268	CONNECTEUR 2 BROCHES + SHUNT	60032444								●	●	●		●			
2273	CONNECTEUR 7 BROCHES + SHUNTS	61004638								●	●			●			

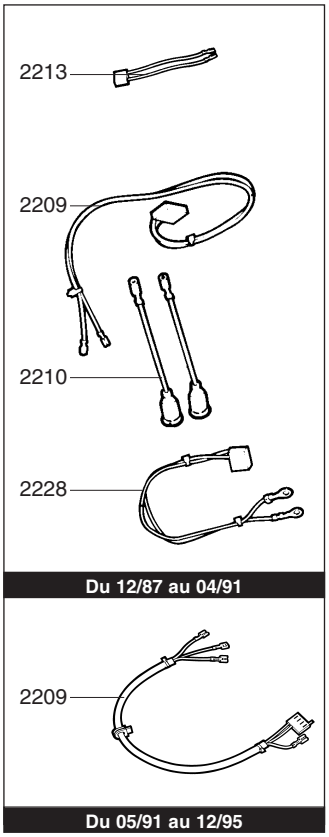
2213
2209
2210
2228
Du 12/87 au 04/91
2209
Du 05/91 au 12/95

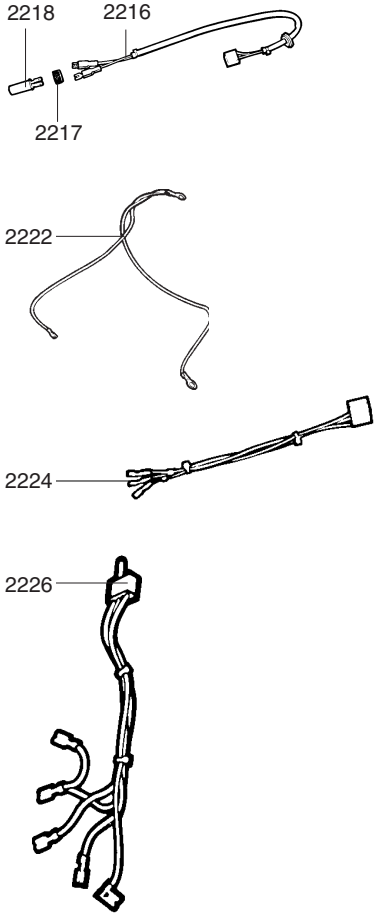
2218
2216
2217
2222
2224
2226

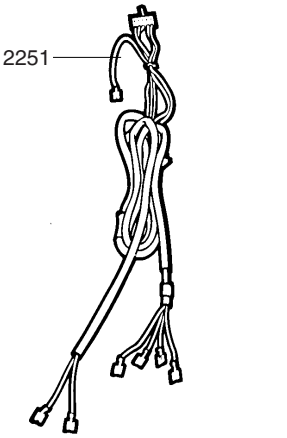
2251

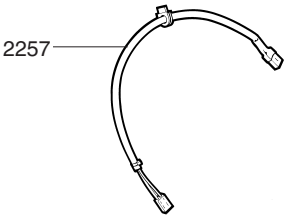
2257

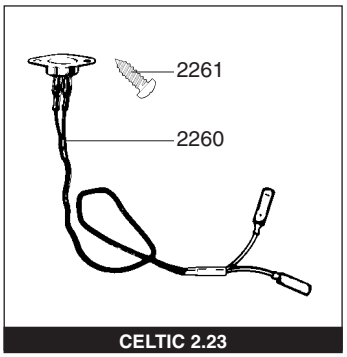
2261
2260
CELTIC 2.23

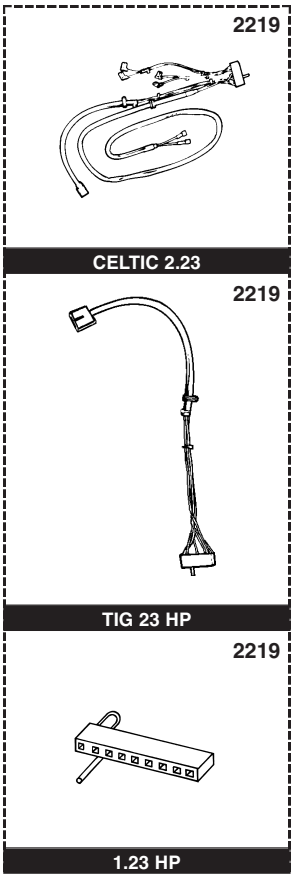
2219
CELTIC 2.23
2219
TIG 23 HP
2219
1.23 HP

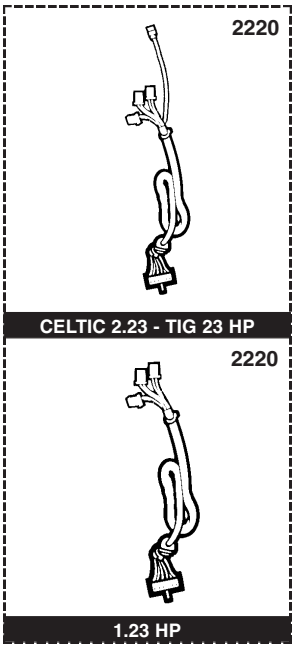
2220
CELTIC 2.23 - TIG 23 HP
2220
1.23 HP

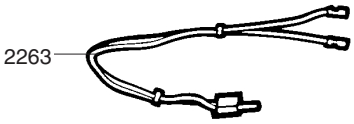
2263

Rep.	Désignation	Référence	Type	14						23					28	Date	
				CELTIC 1.14 HP	TIG 14 HP		CELTIC 1.23 HP	TIG 23 HP		CELTIC 2.23 HP & HPS			CELTIC 2.23 HP	CELTIC 2.28 HPS			
				CF	CF	VMC	CF	CF	VMC	CF	VMC	FF	FFc	CF		de	à
2200	**CABLAGES**																
2209	CABLAGE ALLUMEUR	60078557								●	●	●		●		12/87	04/91
	CABLAGE ALLUMEUR	61004363		●	●	●	●	●	●	●	●	●	●			05/91	12/95
2210	CABLAGE ALLUMEUR	60071001								●	●	●		●		12/87	04/91
2213	CABLAGE CONDENSATEUR	60076005								●	●	●		●		12/87	04/91
2216	CABLAGE THERMISTANCE	60078970		●	●	●	●	●	●	●	●	●	●	●			
2217	ECROU M 14-0.75	60064552		●	●	●	●	●	●	●	●	●	●	●			
2218	THERMISTANCE	60064153		●	●	●	●	●	●	●	●	●	●	●			
2219	CABLAGE VALVE DISTRIBUTRICE	60078967									●						
	CABLAGE VALVE DISTRIBUTRICE	60078967								●				●		12/87	01/94
	SHUNT	61003144		●			●										
	CABLAGE VD-110-57-85-TTB	61008825								●						02/94	12/95
	CABLAGE VANNE 3 VOIES	61009794			●	●		●	●								
2220	CABLAGE ELECTROVANNES	60078964								●	●	●	●	●			
	CABLAGE ELECTROVANNES	61009793		●	●	●	●	●	●								
2222	CABLAGE DE MASSE	60053319								●	●	●		●		12/87	05/93
	CABLAGE DE MASSE	61008379		●	●	●	●	●	●	●	●	●	●	●		06/93	12/95
2224	CABLAGE DISJONCTEUR	60078971		●	●	●	●	●	●	●	●	●	●	●			
2226	CABLAGE INTERRUPTEUR	60078573			●	●		●	●	●	●	●	●	●			
	CABLAGE INTERRUPTEUR	61004831		●			●										
2228	CABLAGE CONDENSATEUR VE	60078969								●	●	●		●		12/87	04/91
2251	CABLAGE EXTRACTEUR	60079468										●				12/87	07/91
	CABLAGE EXTRACTEUR	61004653										●				08/91	12/95
	CABLAGE EXTRACTEUR	61009279											●				
2257	CABLAGE SECURITE DEBIT EAU	60078568										●				12/87	07/91
	CABLAGE SECURITE DEBIT EAU	61004336										●	●			08/91	12/95
2260	CABLAGE & SECURITE 110°C	61004130										●	●				
2261	VIS A TOLE CBLZ D: 3.5-6.5	60031521-03										●	●				
2263	CABLAGE THERMOSTAT	60078563				●			●		●						

2300

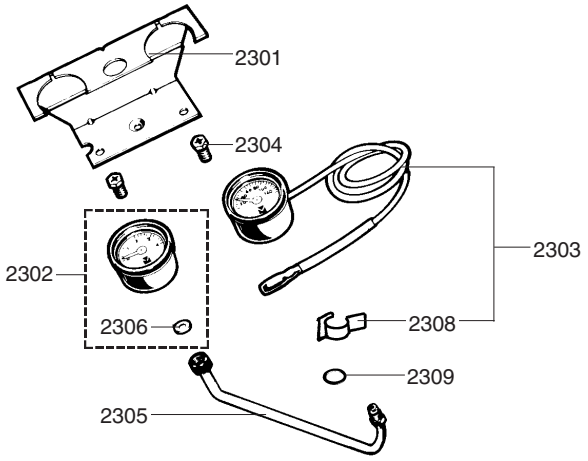
2301
2304
2303
2302
2306
2308
2309
2305

2500

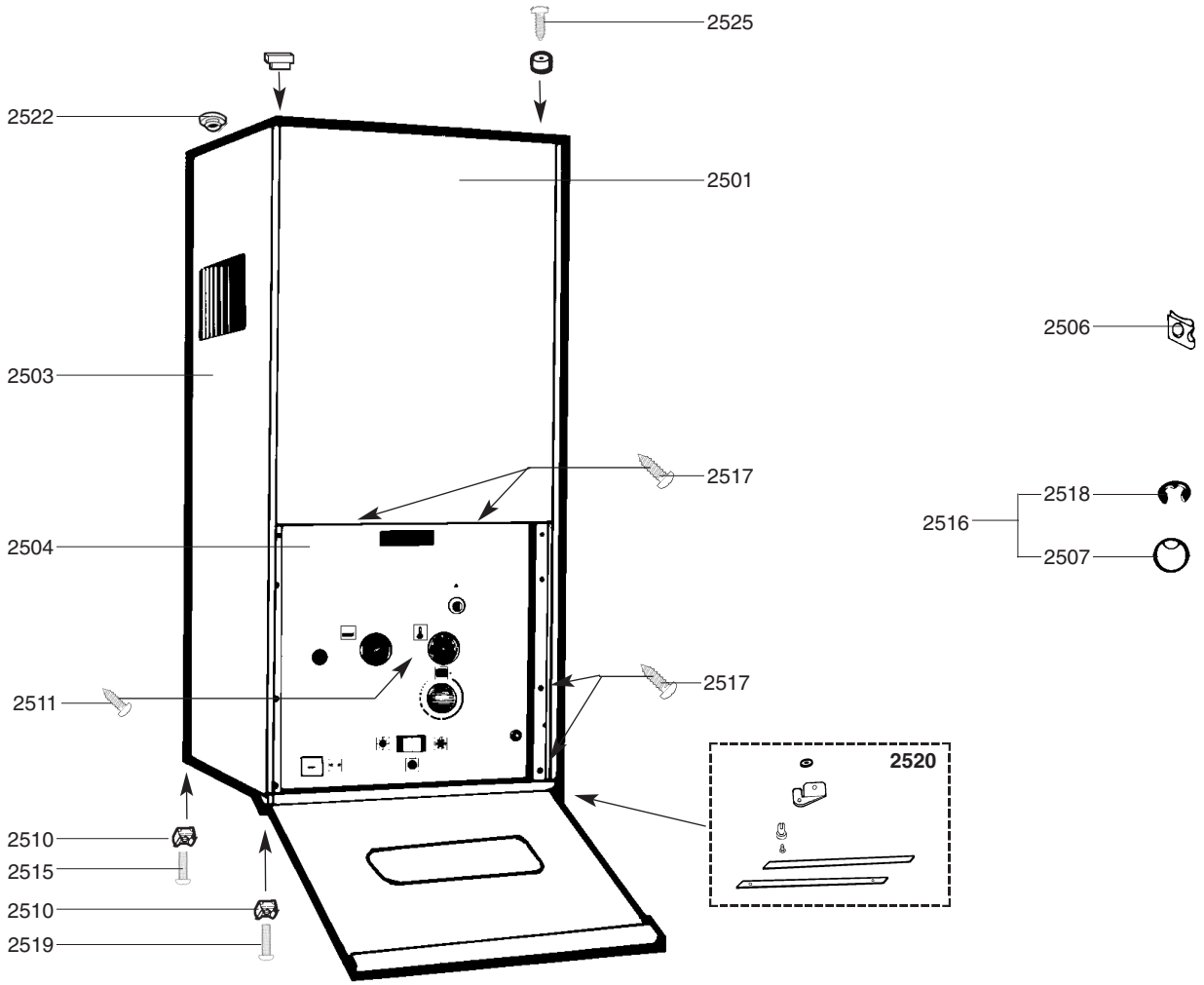
2525
2522
2501
2506
2503
2517
2518
2516
2507
2504
2517
2511
2520
2510
2515
2510
2519

Rep.	Désignation	Référence	Type	14						23					28	Date	
				CELTIC 1.14 HP	TIG 14 HP		CELTIC 1.23 HP	TIG 23 HP		CELTIC 2.23 HP & HPS			CELTIC 2.23 HP	CELTIC 2.28 HPS		de	à
				CF	CF	VMC	CF	CF	VMC	CF	VMC	FF	FFc	CF			
2300	**AFFICHAGE**																
2301	PATTE SUPPORT	60078362		●	●	●	●	●	●	●	●	●	●	●			
2302	MANOMETRE EQUIPE (Pochette)	60081180		●	●	●	●	●	●	●	●	●	●	●			
2303	THERMOMETRE EQUIPE (Pochette)	60081022		●	●	●	●	●	●	●	●	●	●	●			
2304	VIS A TOLE CBLSX D: 6.3-13	61010648		●	●	●	●	●	●	●	●	●	●	●			
2305	TUBE MANOMETRE	61000254		●	●	●	●	●	●	●	●	●	●	●			
2306	JOINT PLAT D: 8.5-4.1-1.5	60061852-12		●	●	●	●	●	●	●	●	●	●	●			
2308	CLIP	60078502		●	●	●	●	●	●	●	●	●	●	●			
2309	JOINT TORIQUE D: 6-1	60024164-41		●	●	●	●	●	●	●	●	●	●	●			
2500	**HABILLAGE**																
2501	PANNEAU AVANT	60044229-06												●			
2503	PANNEAU COTE GAUCHE	60044201		●	●	●	●	●	●	●	●			●			
	PANNEAU COTE GAUCHE	60059197										●	●				
2504	ECRAN SERIGRAPHIE 2.23 HP	61009280								●	●						
2506	ECROU A PINCER	60063603		●	●	●	●	●	●	●	●	●	●	●			
2507	BOUTON POTENTIOMETRE NOIR	60078181		●	●	●	●	●	●	●	●	●	●	●			
2510	ECROU EN CAGE M 6	60004806-03		●	●	●	●	●	●	●	●	●	●	●			
2511	VIS CLS M 6-14	60014044		●	●	●	●	●	●	●	●	●	●	●			
2515	VIS M 6-10	60031527-03		●	●	●	●	●	●	●	●	●	●	●			
2516	BOUTONS (POCHETTE)	60079914		●	●	●	●	●	●	●	●	●	●	●			
2517	VIS A TOLE CBLSX D: 4.2-9.5	61010125		●	●	●	●	●	●	●	●	●	●	●			
2518	CLIP	60078784		●	●	●	●	●	●	●	●	●	●	●			
2519	VIS HS M 6-12	60005799-13					●										
	VIS HS M 6-15	60019316-03		●	●	●	●	●	●	●	●	●	●	●			
2520	REFECTION CHARNIERE (Pochette)	60081418		●	●	●	●	●	●	●	●	●	●				
2522	PASSE FIL	60078378		●	●	●	●	●	●	●	●	●	●	●			
2525	VIS A TOLE CBLZ D: 3.9-9.5	60050460-03		●	●	●	●	●	●	●	●	●	●	●			

2700

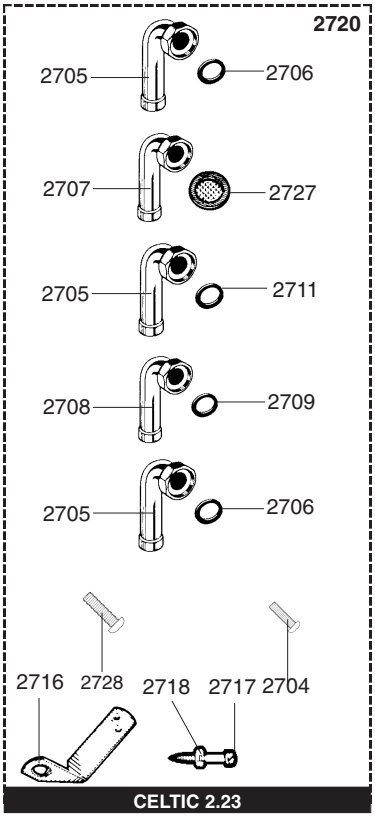
2720
2705
2706
2707
2727
2705
2711
2708
2709
2705
2706
2716
2728
2718
2717
2704
CELTIC 2.23

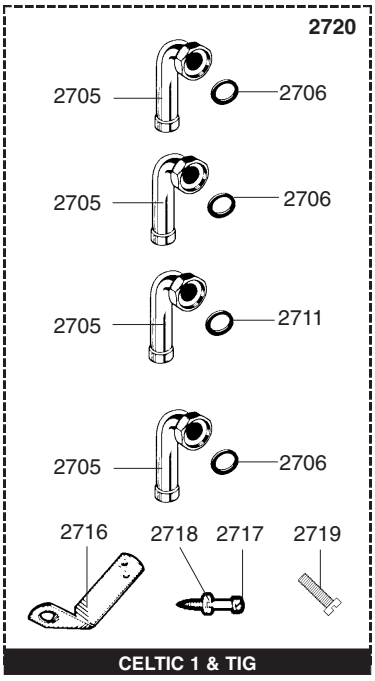
2720
2705
2706
2705
2706
2705
2711
2705
2706
2716
2718
2717
2719
CELTIC 1 & TIG

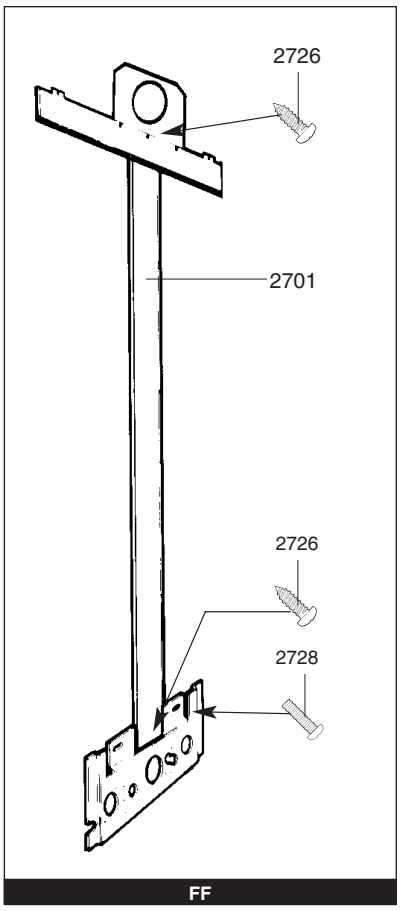
2726
2701
2726
2728
FF

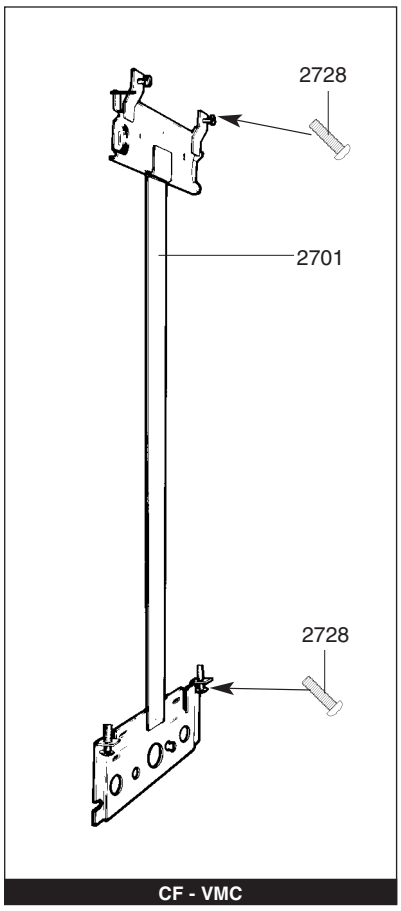
2728
2701
2728
CF - VMC

2725

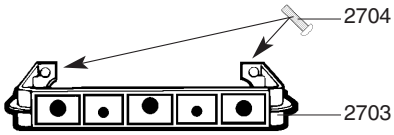
2704
2703

2900

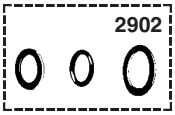
2902

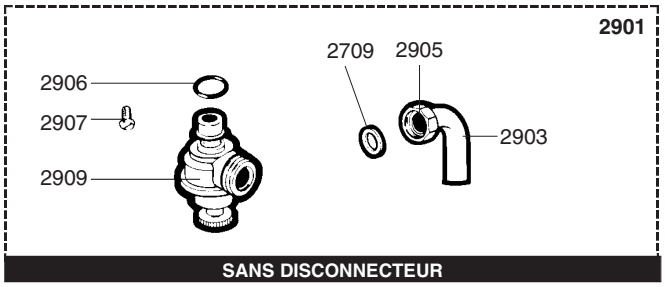
2901
2906
2907
2909
2709
2905
2903
SANS DISCONNECTEUR

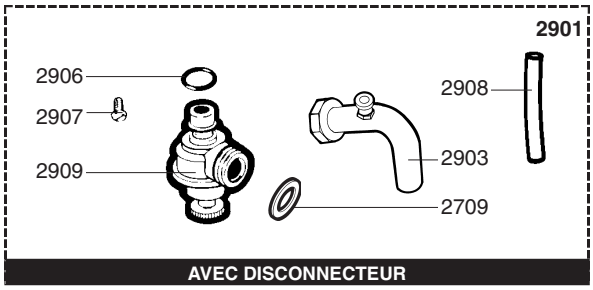
2901
2906
2907
2909
2908
2903
2709
AVEC DISCONNECTEUR

Rep.	Désignation	Référence	Type	14						23					28	Date	
				CELTIC 1.14 HP	TIG 14 HP		CELTIC 1.23 HP	TIG 23 HP		CELTIC 2.23 HP & HPS			CELTIC 2.23 HP	CELTIC 2.28 HPS			
				CF	CF	VMC	CF	CF	VMC	CF	VMC	FF	FFc	CF		de	à
2700	**PREFABRICATION**																
2703	GABARIT DE POSE	60057161		●			●			●	●	●	●	●			
2704	VIS M 6-10	60031527-03		●	●	●	●	●	●	●	●	●	●	●			
2705	DOUILLE DE RACCORDEMENT	60057167		●	●	●	●	●	●	●	●	●	●	●			
2706	JOINT PLAT D: 24-17-1.5	60061855-19		●	●	●	●	●	●	●	●	●	●	●			
2707	DOUILLE DE RACCORDEMENT EF	60057169								●	●	●	●	●			
2708	DOUILLE DE RACCORDEMENT EC	60057168								●	●	●	●	●			
2709	JOINT PLAT D: 18.4-12.2-1.5	60061855-14		●	●	●	●	●	●	●	●	●	●	●			
2711	JOINT PLAT D: 24-18.2-1.5	60022835-01		●	●	●	●	●	●	●	●	●	●	●			
2717	VIS A BOIS D:6-38	60025617-03		●	●	●	●	●	●	●	●	●	●	●			
2718	RONDELLE D: 14.2-7.2-1.2	60005369-03		●	●	●	●	●	●	●	●	●	●	●			
2720	RACCORDEMENT (POCHETTE)	60079918								●	●	●	●	●			
2725	JOINTS PREFABRICATION (Poch.)	60081062								●	●	●	●	●			
2726	VIS A TOLE CBLSX D: 4.2-9.5	61010125								●	●	●	●	●			
2727	FILTRE EAU	61004418								●	●	●	●	●			
2728	VIS HS M 6-25	60010942-13		●	●	●	●	●	●	●	●	●	●	●			
2900	**SOUPAPE**																
2901	SOUPAPE DE SECURITE (Pochette)	61004632								●	●	●		●			07/91
	SOUPAPE DE SECURITE (Pochette)	61004632		●	●	●	●	●	●								
	SOUPAPE DE SECURITE (Pochette)	61007105								●	●	●	●			08/91	12/95
2902	REFECTION SOUPAPE (Pochette)	60081025		●	●	●	●	●	●	●	●	●	●	●			
2903	DOUILLE RACCORDEMENT SOUPAPE	60047727		●	●	●	●	●	●								
	DOUILLE RACCORDEMENT SOUPAPE	60047727								●	●	●		●		12/87	07/91
2905	ECROU 1/2” EP: 10	60020747-68		●	●	●	●	●	●	●	●	●		●			
2906	JOINT TORIQUE D: 13.6-2.7	60024164-18		●	●	●	●	●	●	●	●	●	●	●			
2907	VIS A TETON M5	60017908		●	●	●	●	●	●	●	●	●	●	●			
2908	TUBE PVC D: 9x12 L: 1M	60081266								●	●	●	●	●			
2909	SOUPAPE DE SECURITE 3 BARS	61020933		●	●	●	●	●	●	●	●	●	●	●			

3000

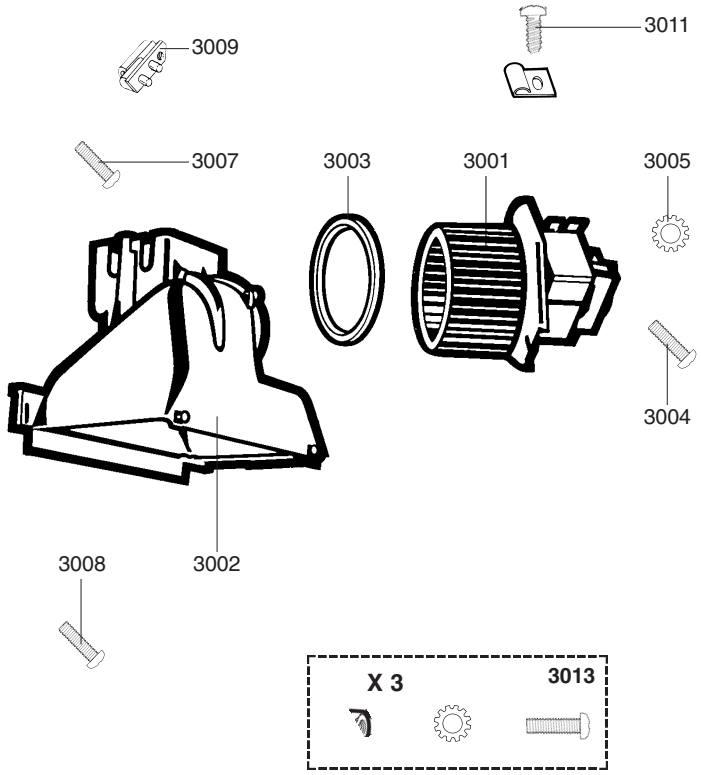

3300

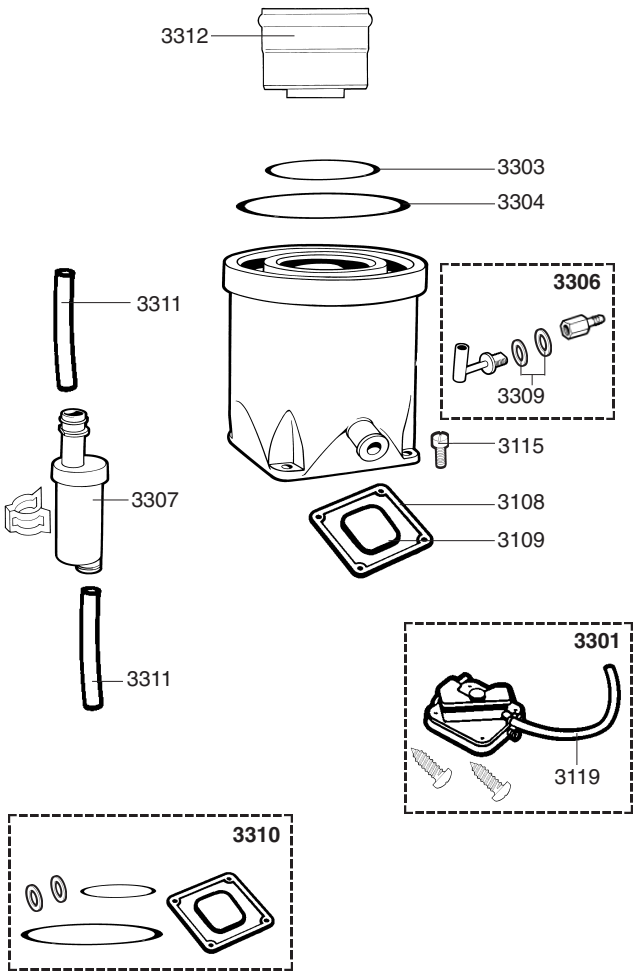

3100

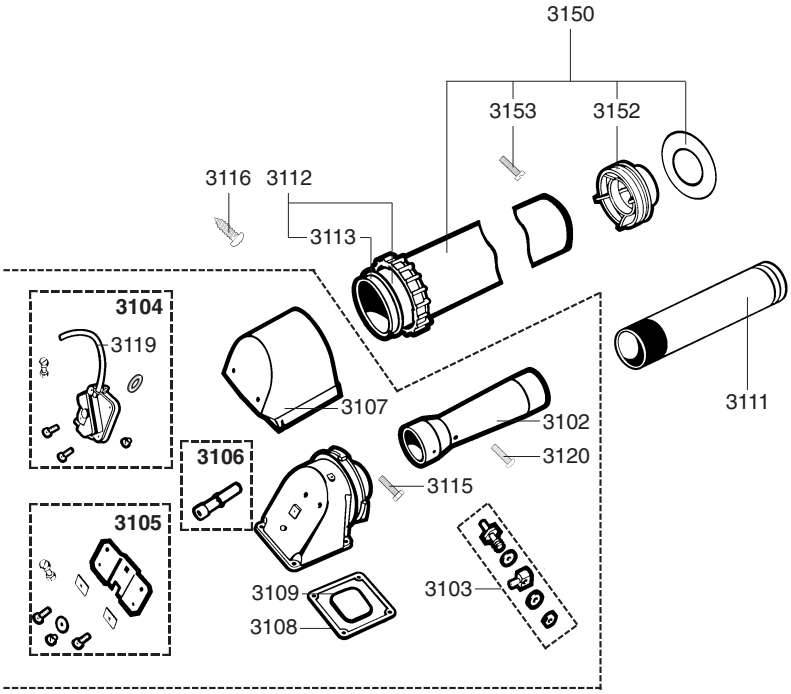

3200

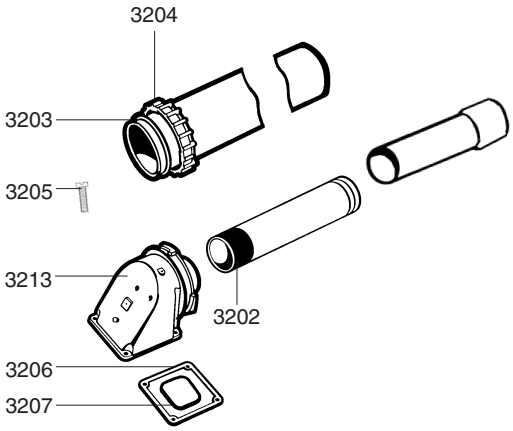

Rep.	Désignation	Référence	Type	14			23						28		Date	
				CELTIC 1.14 HP	TIG 14 HP		CELTIC 1.23 HP		TIG 23 HP	CELTIC 2.23 HP & HPS		CELTIC 2.23 HP	CELTIC 2.28 HPS			
				CF	CF	VMC	CF	CF	VMC	CF	VMC	FF	FFc	CF	de	à
3000	**EXTRACTEUR 220V**	60058026										●				
3001	MOTEUR D'EXTRA. + TURBINE 220V	60058027										●	●			
3002	BOITIER D'EXTRACTION	60056628										●				
3003	JOINT DE FORME (Couvercle)	60055083										●	●			
3004	VIS AUTOTARAUDEUSE M 4-15	60039054-03										●	●			
3005	RONDELLE EVENTAIL D: 4	60028466-03										●	●			
3007	VIS HS M 6-12	60005799-13										●	●			
3008	VIS CBLZ M 4-8	60057750										●	●			
3009	VENTURI	61009248											●			
3011	VIS A TOLE CBLZ D: 3.9-9.5	60050460-03											●			
3013	VIS DE FIXATION MOTEUR (Poch.)	60081422										●				
3100	**EXTRACTION**															
3102	VENTURI D'EXTRACTEUR	60060359										●				
3103	PRISE DE PRESSION (Pochette)	60081053										●				
3104	PRESSOSTAT AIR (Pochette)	60081054										●				
3105	SUPPORT PRESSOSTAT (Pochette)	60081369										●				
3106	PRISE DE PRESSION (Pochette)	60081056										●				
3107	CAPOT (/ PRESSOSTAT)	60060418										●				
3108	JOINT DE FORME	60053839										●				
3109	JOINT DE FORME	60053840										●				
3111	GAINE INTERIEURE	60061084										●				
3112	BAGUE SERRAGE & JOINT TORIQUE	60081057										●				
3113	JOINT DE FORME (/Collerette)	60053842										●				
3115	VIS HS M 6-15	60019316-03										●				
3116	VIS A TOLE CLS D: 3.9-19	60061982										●				
3119	TUBE SILICONE D: 6x1 L: 1.30M	60081265-04										●				
3120	VIS M 5-8	60015691-03										●				
3153	VIS M 3-10	60063840										●				
3200	**SORTIE 3CE**															
3202	MANCHON	61009423											●			
3203	JOINT DE FORME (/Collerette)	60053842											●			
3205	VIS HS M 6-15	60019316-03											●			
3206	JOINT DE FORME	60053839											●			
3207	JOINT DE FORME	60053840											●			
3213	DOUBLE COUDE	61009478											●			
3300	**KIT ADAPTATION SORTIE VERT**.	61007695										●				
3301	PRESSOSTAT AIR (Pochette)	60081516										●				
3303	JOINT DE FORME (/Adaptateur)	60077900										●				
3304	CORDON CAOUT. SIL. D: 5 L: 1M	60081273-07										●				
3307	SIPHON (Pochette)	60081299										●				
3309	JOINT PLAT D: 18.4-10.2-1.5	60061855-23										●				
3310	JOINTS DE SORTIE VERT. (POCH.)	60081518										●				
3311	TUBE SILICONE D: 21x2.5 L: 1M	60081265-02										●				
3312	REDUCTION 80/70	61008100										●				

5000

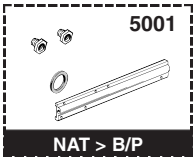

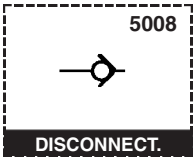

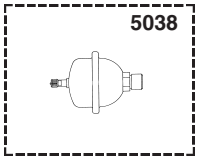

Rep.	Désignation	Référence	Type	14						23					28	Date	
				CELTIC 1.14 HP	TIG 14 HP		CELTIC 1.23 HP	TIG 23 HP		CELTIC 2.23 HP & HPS			CELTIC 2.23 HP	CELTIC 2.28 HPS			
				CF	CF	VMC	CF	CF	VMC	CF	VMC	FF	FFc	CF		de	à
5000	**OPTIONS**																
5001	EQT TRANSF NAT > BUT/PROP	60079582										●					
	EQT TRANSF NAT > BUT/PROP	60079673					●	●		●							
	EQT TRANSF NAT > BUT/PROP	60079675									●						
5002	EQT TRANSF BUT/PROP > NAT	60079583										●					
	EQT TRANSF BUT/PROP > NAT	60079674								●						12/87	01/94
	EQT TRANSF BUT/PROP > NAT	60079676									●						
	EQT TRANSF BUT/PROP > NAT	60079690												●			
	EQT TRANSF BUT/PROP > NAT	61009840					●	●									
	EQT TRANSF BUT/PROP > NAT	61009840								●						02/94	12/95
5008	DISCONNECTEUR (EQT)	60061909								●	●	●		●			
5018	KIT ADAPTATION SORTIE VERT.	61007695										●					
5038	MINI VASE D'EXPANSION SANI KIT	61009369								●	●	●					

LISTE DES ABRÉVATIONS

EC ..... : Eau chaude.
EF ..... : Eau froide.
C ..... : Résistance Céramique (Chauffe normale).
Ca ..... : Résistance Céramique (Chauffe accélérée).
TP ..... : Résistance ThermoPlongeur.
1F ..... : Avec Robinetterie.
2F ..... : Sans Robinetterie.
3F ..... : Avec Robinetterie et une sortie supplémentaire.
AMI ..... : Avec Mélangeur Intégré.
SMI ..... : Sans Mélangeur Intégré.
TYPE ..... : Indique la nature de l'appareil.
PN ..... : Ces références concernent uniquement un appareil à Pression Normale.
BP ..... : Ces références concernent uniquement un appareil à Basse Pression.
PV ..... : Ces références concernent uniquement un appareil à Puissance Variable.
PF ..... : Ces références concernent uniquement un appareil à Puissance Fixe.

PLAQUE SIGNALÉTIQUE

NUMÉRO DE SÉRIE

12 Caractères : 1 95 065004 - 31

- Mois de fabrication : de 1 à 9 ➟ Jan. à Sep., O ➟ Oct., N ➟ Nov., D ➟ Dec.
- Année de fabrication
- Code séquentiel
- Indice technique de l'appareil

20 Caractères : 3675007 XX 2 07 070 00315

- Code appareil
- Millénium de fabrication
- Année de fabrication
- Jour de fabrication
- Code séquentiel

21 Caractères : 3675007 XX 07 070 0000315

- Code appareil
- Année de fabrication
- Jour de fabrication
- Code séquentiel

Les renseignements portés sur les tarifs et documentations commerciales ou techniques, les schémas et côtes d'encombrements sont donnés à titre indicatif et valables à un instant donné. Le CONSTRUCTEUR se réserve le droit d'apporter toutes modifications de présentation, de forme, de dimension, de conception ou matière à ses produits.